Olan (TM15") Block Diagram

Project code: 91.4Z701.001
PCB P/N : 48.4Z701.001
REVISION : 07249-2M

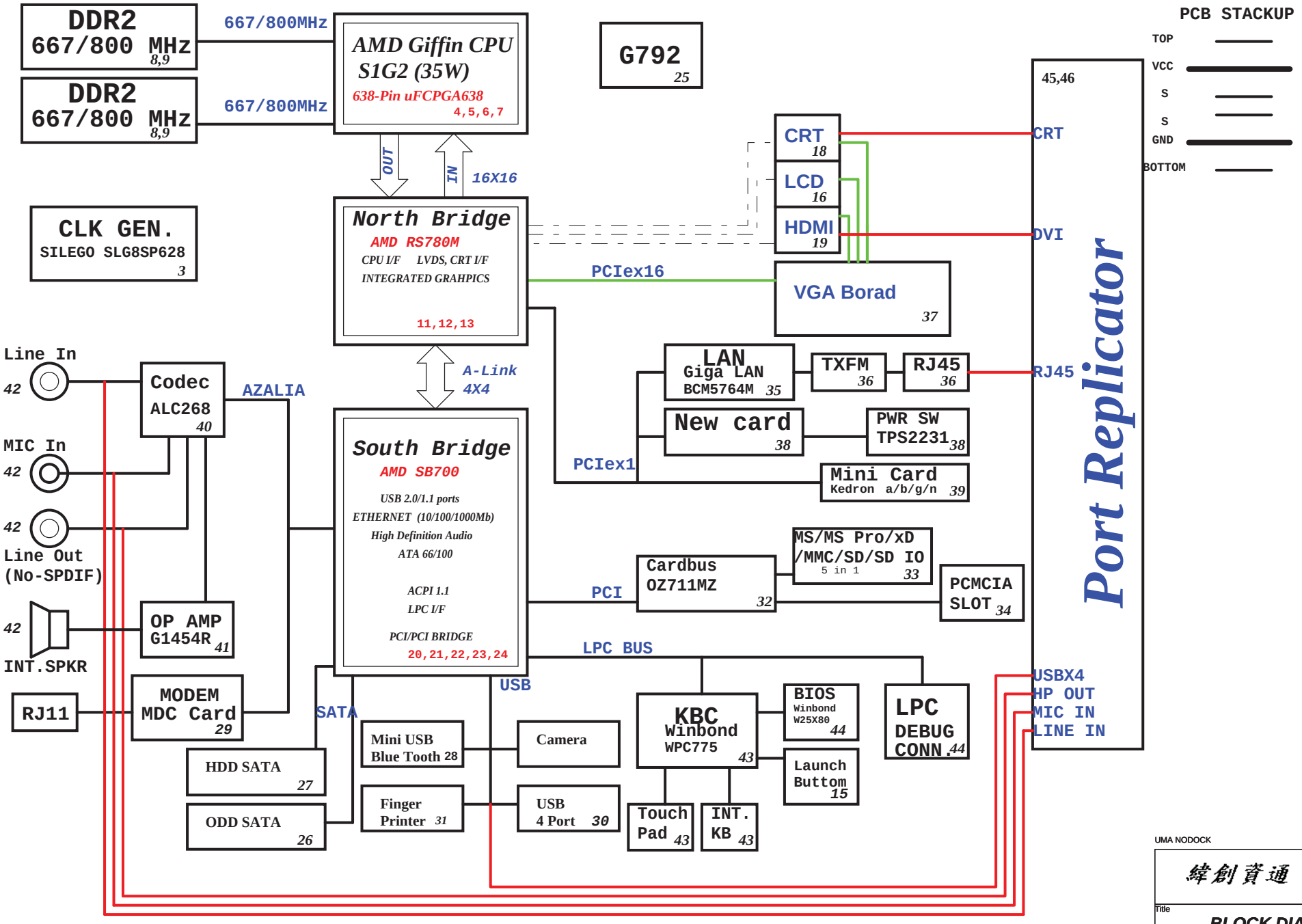

PCB STACKUP

TOP
VCC
S
S
GND
BOTTOM

SYSTEM DC/DC TPS51125 51	
INPUTS	OUTPUTS
DCBATOUT	5V_S5(7A) 3D3V_S5(7A)

SYSTEM DC/DC TPS51124 52	
INPUTS	OUTPUTS
DCBATOUT	1D1V_S0(9A) 1D2V_S0(5A)

SYSTEM DC/DC TPS51117 53	
INPUTS	OUTPUTS
DCBATOUT	1D8V_S3(10A)
RT9026PFP 54	
5V_S5	DDR_VREF_S3 0D9V_S3
RT9166 54	
3D3V_S0	2D5V_S0 (300mA)
G957 54	
3D3V_S0	1D5V_S0 (1A)
G9161 54	
3D3V_S5	1D2V_S5 (400mA)

CHARGER BQ24745 55	
INPUTS	OUTPUTS
DCBATOUT	CHG_PWR 18V 6.0A UP+5V 5V 100mA

CPU DC/DC ISL6265HR 50	
INPUTS	OUTPUTS
DCBATOUT	VCC_CORE_S0_0 0~1.55V 18A VCC_CORE_S0_1 0~1.55V 18A VDDNB 0~1.55V 18A

UMA NODOCK

緯創資通 Wistron Corporation
21F, 88, Sec.1, Hsin Tai Wu Rd., Hsichih, Taipei Hsien 221, Taiwan, R.O.C.

Title: BLOCK DIAGRAM

Size: A3 | Document Number: Olan | Rev: -2M

Date: Monday, May 05, 2008 | Sheet 1 of 58

5.Page 19: "HDMI1" add 2'nd source 62.10078.171.
6.Page 18: "F3" change to FUSE-1A6V-2-GP.
7.Page 30: "USBCN1" change to "20.F0765.020"
8.Page 26: ODD connector "SKT1" change to "62.10065.291"
9.Page 40: Add analog MIC schematic.
10.Page 46: Add "RN65" for NO duck LAN LED
11.Page All: Close PWR GAP
12.Page 03: Update "U18" foot print
13.Page 57: Add test point under Dimm Door
14.Page 55: "R32" pull hi from "3D3V_AUX_S5" to "BQ24745_VREF"
15.Page 41: Change audio AMP to G1454R41
16.Page 55: Change C34 size from 0402 to 0603
17.Page 57: Add EMI capacitor follow EMI recommend
18.Page 22: Add E-SATA schematic
==========
2007/12/20
1.Page 12: "R109" change to "768R2F-1-GP"
2.Page 46: Remove "RN19" "RN21" "RN22" "RN23" "RN53" "RN54" "RN55" "RN56"
3.Page 46" connect U12 HDMI switch to PEG_TX
4.Page 51 : Modify 5V & 3D3V 51125_ENTIP1 & 51125_ENTIP2 schematic.
5.Page 06: PH 300 ohmo on "CPU_DBREQ#"; PL 300 ohmo on "CPU_TEST21" & "CPU_TEST24"
6.Page 12: PH "SUS_STAT#" 10K ohmo to 3D3V_S0
7.Page 45: Add "DOCK1" PIN 51 "CRT_DEC#"
8.Page 46: Modify HDMI switch to "PS8122QFN48G-GP"
==========
2007/12/25
1.Page 46: Connect "3D3V_S0" to U12 remove "3D3V_S0_PI"
2.Page 45: Add "R497" "R498" "R499" for DIS CRT switch
3.Page 46: Add Pi filter before dock & C818 C819 for VSYNC_5 and HSYNC_5
4.Page 37: Add "R618" PU for "AC/BAT_DET"
==========
2007/12/26
1.Page 21: Swap USB port 8 and Port 10.
2.Page 45: Follow net swap report.
3.Page 41: Add "R633" DY PL "1451_SD"
4.Page 46: RN19~RN23, RN42~RN45 & RN65 change to SRN0J-10-GP
5.page 43: Add R634 ,U17 pin120 connect “SPI_WP_R#”
6.Page 30: Follow Homa modify "USBCN1"
==========
2007/12/27
1.Page 11: NEW CARD PCIE channel change to channel 3.
2.Page 21: "DOCK_DT1#" change to "GEVENT7#" and DY 0 ohmo resistor
3.Page 37: Add "R618" PU for "AC/BAT_DET" on MXM pin 157, Connect MXM SMB with "RN53"
4.Page 45: Add Pi filter before dock
5.Page 18: change R113, R114, R106 and R99 to 33ohm. change C471, C468 and C466 to 2.2pf.
6.Page 43: Change R186 to 150ohm for PLT_RST1#_1 (KBC U20A)
7.Page 35: Change C86 to 150pf LAN_RST (LAN U8)
8.Page 32: Change C631 to 150pf PLT_RST1#_MXM (U58 OZ711)
9.Page 37: Change C510 to 330pf for PLT_RST1#_MXM (MXM)
10.Page 33: Add C650 to 220pf for PCIRST1# (CR U67)
11.Page 38: Add C639 to 220pf for NEW_RST# (NEW U66)
12.Page 43: R181 change to 30KF for BOM integrate
13.Page 39: Change R226 to 470ohm for MINI_RST# (MINI MINIC1)
14.Page 12: Add 330pf C551 between R313 and ground for SYSREST# (NB U43C).
15.Page 40: Change C379 to 56pf for RESET# (AUDIO U24)
16.Page 06: Change R298 to 33ohm for LDT_RST#_CPU
17.Page 45: Change RN4 connect to "CRT_R_S" "CRT_G_S" "CRT_B_S"
18.Page 24: Change R89 to 10R2J-2-GP for BOM integrate
19.Page 46: Follow net swap report.
20.Page 57: Add Spring "GND1" "GND2"
==========
2007/12/28
1.Page 57: Add EMI capacitor follow EMI recommend.
2.Page 45: ADD EC191 EC192 EC193 follow EMI recommend.
==========
2007/12/28a
1.Page 40: Codec IC change to ALC268.
2.Page 41: ADD U69 G1412 AMP for Line out.
3.Page 33: Add EMI capacitor Follow EMI recommend
==========
2007/12/31
1.Page 22: Change PlanarID to SB and ADD CLK_ID to identify Clock Gen.
2.Page 42: Modify "INTMIC1: to MONO MIC
3.Page 40: Modify ALC_268 to MONO MIC schematic, Add "DOCK_DT1#" on "GPIO1"
==========
2008/01/02
1.Page 40: Change Speaker and Line-out channel.
2.Page 40: Chanhe "DOCK_DT1#" connect to GPIO3 U24 pin 3.
3.Page 40: Modify "MIC" and "Line_in" schematic.
4.Page 30: Modify "USBCN1" schematic follow Homa.
5.Page 43: Add "R654" 10K PU 3D3V_S0 for "FP_DETECT#".
6.Page 21: Add "R200" 10K PU 3D3V_S0 for "FP_ID"
7.Page 51: Add "R549" 0 ohm for "MXM_THER".
8.Page 40: Change R196 to 64.39225.6DL 39.2K.
9.Page 21: Remove "R397" "R489" R490" "R491", add "RN56" for component count.
==========
2008/01/03
1.Page 50: Change C4 to SC1U10V3KX-3GP for BOM integrate
2.Page 55: Change C296 form SC1U25V5KX-1GP (P/N 78.10522.21L) to SC1U25V0KX-GP (P/N 78.10522.5BL)
3.Page 43: Remove "R188" "R177" "R185" "R189", add "RN56" for component count.
4.Page 46: Swap U12 Pin 29 & Pin 28; add C394, C395 D01u.
5.Page 22: Add U41 E-STAT solution
6.Page 21: Add R326 for NB_PWRGD
7.Page 48: Add R498 for NB_PWRGD
==========
2008/01/03a
1.Page 46: Modify SM BUS PH resistor
2.Page 40: Add "R119" and "R177" for ALC268 GPIO1
==========
2008/01/04
1.Page 22: Swap RN68 net
==========
2008/01/04a
1.Page 57: Remove H23; H24.
2.Page 06: Remove R300, R301, change to "RN71"
==========
2008/01/07
1.Page All: Follow Net swap report.
==========
2008/01/07a
1.Page 22: Swap U41 Pin 3, 4 & Pin 17, 18.
==========
2008/01/07b
1.Page 57: Add H23 screw holl.
==========
2008/01/07c
1.Page All: Follow Net swap report.
==========
2008/02/01
1.Page 45: Change "DOCK1" to 20.F1257.001.
==========
2008/02/04
1.Page 40: Add R327, R328, EC200, EC201 for EMI solution.
==========
2008/02/05
1.Page 22: Add R397 follow caystal FAE recommend.
2.Page All: Short 0 ohm resistor with PAD.
3.Page 18: Remove "D2" "D3" "D4" for ME & Layout
==========
2008/02/13
1.Page 41 & 42: Modify Line-out jack connection.
==========
2008/02/13a
1.Page 06: Follow AMD recommend Add & Dummy "R503" to PU "CPU_LDT_REQ#".
==========
2008/02/13b
1.Page 06: Change "R503" to "R304" to PU "ALLOW_LDTSTOP".
2.Page 06 & 12: Remove net "CPU_LDT_REQ#" Replace with "ALLOW_LDTSTOP"
3.Page 21: Add "R134" & "R185" for "HDMI" on SB700 "GPIO0".
4.Page 42: Change "C400" "C401" to "R301" & "R218"
==========
2008/03/03
page3, remove RN31 (control by SW)
page12,merge R105,R107 to RN29
merge R309,R310,R311 to RN72 (R309 can use 3K)
page14 merge R477,R476 to RN73
page16 RN1 change to 2 pcs 0ohm PAD "R476" "R477"
merge R29,R30 to RN53
page18 merge R106,R99 to RN75
merge R113,R114 to RN74
merge R283,R284 to RN30
merge R275,R276 to RN32
merge R319,R98 to RN31
page20 change R165,R164,R404,R403 to 0 ohm PAD (only use for strap,don't need 22 ohm)
page21 merge R170,R159 to RN34
merge R162,R160 to RN33
R185 for Dock(input can't floating)
page22 Short R140,R138
C672,C671,C673,C674 for E-SATA only,need add DIS
check with SW to remove CLK_ID setting(use SMBus)
dummy all E-SATA re-driver
change RN67,RN68 to PAD
page24 merge R437,R421 to RN35
merge R344,R355 to RN36
del R360,R366,merge R361,R365 to RN37
page35 change R265,R263,R67,R87,R72,R269,R270,R79,R260,R58,R54,R56,R38,R44,R42,R46,R74,R83 TO 0ohm PAD
page37 change r456 to PAD
page39 check R224/R225,R222/R229, need confirm spec

page40 check R327,R328 with EMI
change RN55,R325 to PAD
Modify schematic for current leackage on "DOCK_DT1#"
R119 for Dock (input can't floating)
page42 merge R217,R220 to RN55
merge R214,R215 to RN67
merge R475,R479 to RN76 (need change to 48 ohm)
page44 change ER1, ER2,ER4 to PAD
dummy EC69
change ER3 to 33 ohm
page47 change R316 to PAD
page48 level shift for NB_PWRGD
page50 change R12,R13,R14,R3,R4,R7 to PAD
page53 change R261 to PAD
page54 change R317,R318 to PAD
page55 change R148,R147,R132,R131 to PAD
merge R28,R32,R31,R37 to RN77 (please take care R32 power)
==========
2008/03/04
1.Page 26: Modify "SKT1" ODD connector.
2.Page 45: Merge "R292" "R293" to "RN68".
3.Page 51: change R416,R441 to PAD for noise issue.
4.Page 16: "F2" change to "69.50007.A31".
==========
2008/03/04b
1.Page 51: change R416,R442 to PAD and DY "R441" for noise issue.
2.Page 17: "LED3" change to "3D3V_S5" "LED2" change to "3D3V_AUX_S5".
3.Page 30: Modify "USBCN1" pin define.
4.Page 40: Remove "C377" "C379" short them
5.Page 40: Remove "R177" for new INTMIC connector
6.Page 42: Modify "INTMIC" schematic.
7.Page 45: Merge R497, R498, R499 to RN68; R287, R286, R289 to RN78.
8.Page 16: Add RN79 for ESD.
9.Page 45: "DOCK1" "PIN S51" change to "CRT_IN#_R" for ESD.
10.Page 45: Add "RN80" for ESD
11.Page 56: Add "D30" on "BAT_IN#" for ESD, Change "RN59" to 8P4R for "BAT_IN#" ESD
==========
2008/03/05
1.Page 32: Add "R220" and Dummy for "PME" issue.
2.Page 39: Change "3D3V_S5_MINI1" to "3D3V_S5" and Change "3D3V_S0_MINI" to "3D3V_S5".
3.Page 17: Merge "R485" "R486" to "RN81"; Merge "R487" "R488" to "RN82".
4.Page 17: Change "R473" to "453R2F-1-GP"; Change "R480" to "150R2F-1-GP".
5.Page 14: Merge "R179" "R180" to "RN83".
6.Page All: Follow Swap report.
==========
2008/03/06
1.Page 30: "USBCN1" pin 15 change to GND.
2.Page 22: Remove "U41" relative schematic.
3.Page 40: "RN41" change to 4P2R
4.Page 42: Merge "R474" "R475" to "RN84".
5.Page 42: Change "EC6" "EC7" "EC8" "EC9" to 0603
6.Page 40: Change "EC200" "EC201" to 0603
7.Page 38: "U66" change to 74.00577.A73
8.Page 57: ADD EMI capacitor "EC203" ~ "EC220".
9.Page 40: Merge "R329" "R330" "R325" to "RN85" for ESD.
10.Page 42: Short "RN67" with PAD.
==========
2008/03/06a
1.Page 51: Change "TC17" "TC10" to 77.21561.00L & mount.
2.Page 50: Change "C7" "C8" to 77.21561.00L & mount.
3.Page 52: Change "TC19" to 79.10712.L02.
4.Page 55: Add "C826" for Vendor suggest added decoupling capacitor in CSSN to ground.
==========
2008/03/07
1.Page 55: Change "D9" to 83.R0203.08F & mount.
2.Page 57: Add Spring "GND5 and EMI capacitor "EC221" ~ "EC229".
==========
2008/03/10
1.Page 57: Add "GND11" for EMI, "GND8" "GND9" "GND10" change to "34.15F09.001".
2.Page 52: Change "TC21" to SE100U25VM-L1-GP.
3.Page All: Follow Swap net.
==========
2008/03/10a
1.Page 55: Change "TC21" to SE100U25VM-L1-GP.
2.Page 57: Remove "GND6" "GND7".
==========
2008/03/11
1.Page 57: Remove "EC204" "EC205".
==========
2008/03/11a
1.Page 40: "R194" change to "51R2J-2-GP".
2.Page 29: "R235" change to "15R2J-GP" & DY "C424".
3.Page 21: Change "RN33" to "R655" & "R656" with "27R2J-1-GP"; Change "RN34" to "SRN47J-7-GP"; UNdummy "EC61" "EC62".
4.Page 48: Add "U70" for "NB_PWRGD" level shift.
==========

UMA NODOCK

緯創資通 Wistron Corporation
21F, 88, Sec.1, Hsin Tai Wu Rd., Hsichih,
Taipei Hsien 221, Taiwan, R.O.C.

Title: **HISTORY**

Size	Document Number	Rev
A3	Olan	-1

Date: Friday, April 18, 2008 Sheet 2 of 58

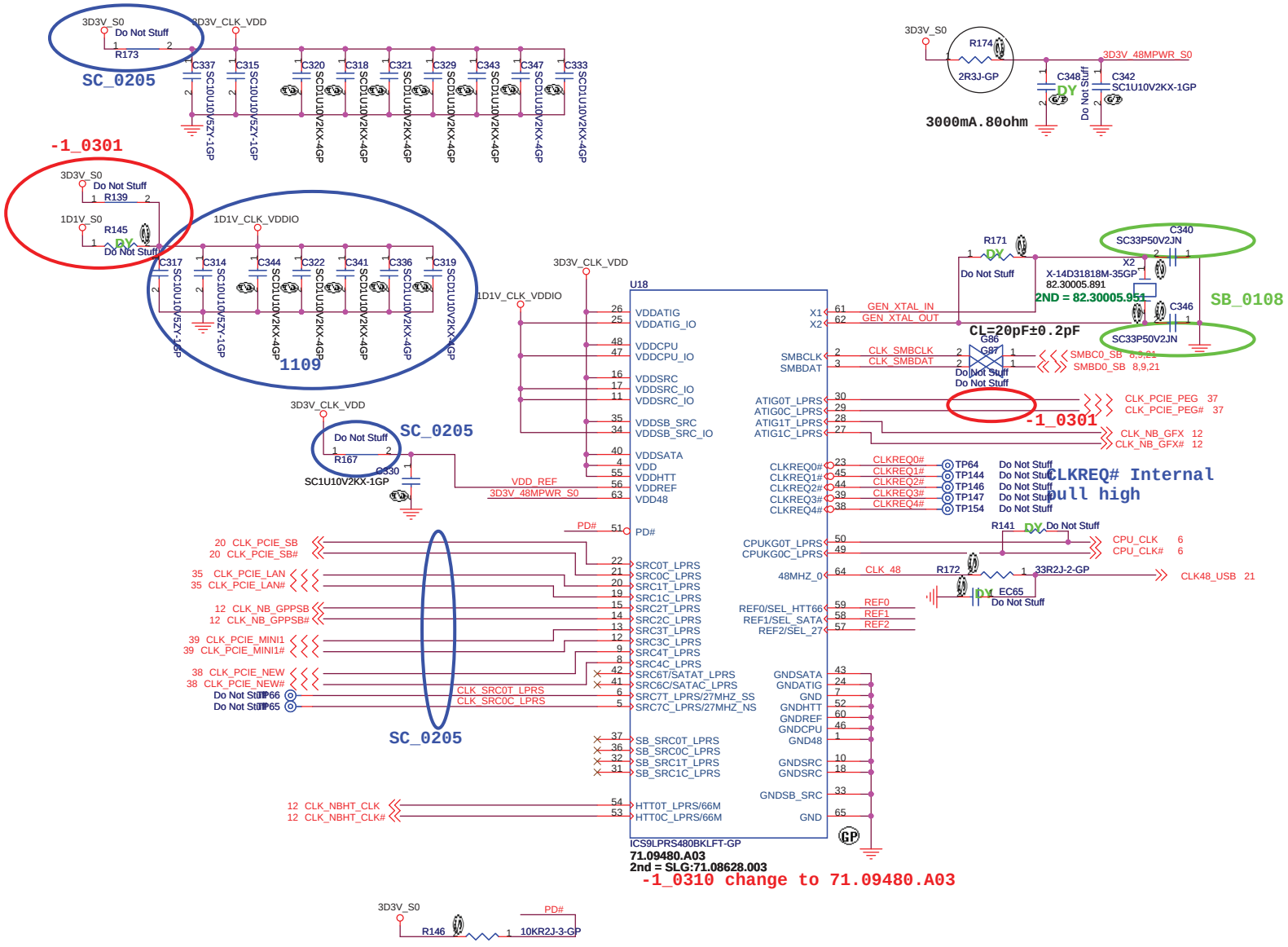

Due to PLL issue on current clock chip, the SBlink clock need to come from SRC clocks for RS740 and RS780. Future clock chip revision will fix this.

Clock chip has internal serial terminations for differencial pairs, external resistors are reserved for debug purpose.

NB CLOCK INPUT TABLE

NB CLOCKS	RS740	RX780	RS780
HT_REFCLKP	66M SE(SINGLE END)	100M DIFF	100M DIFF
HT_REFCLKN	NC	100M DIFF	100M DIFF
REFCLK_P	14M SE (3.3V)	14M SE (1.8V)	14M SE (1.1V)
REFCLK_N	NC	NC	vref
GFX_REFCLK	100M DIFF	100M DIFF	100M DIFF(IN/OUT)*
GPP_REFCLK	NC	100M DIFF	NC or 100M DIFF OUTPUT
GPPSB_REFCLK	100M DIFF	100M DIFF	100M DIFF

* RS780 can be used as clock buffer to output two PCIE referecence clocks
By deault, chip will configured as input mode, BIOS can program it to output mode.

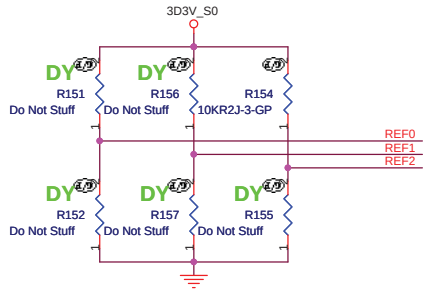

SEL_SATA REF1	1	100 MHz non-spreading differential SRC clock
	0*	100 MHz spreading differential SRC clock
SEL_HTT66 REF0	1	66 MHz 3.3V single ended HTT clock
	0 *	100 MHz differential HTT clock

* default

CPU_CLK(200MHz)

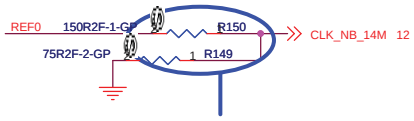

	OSC_14M_NB
RS780M	1.1V 158R/90.9R

UMA NODOCK

Wistron Corporation
21F, 88, Sec.1, Hsin Tai Wu Rd., Hsichih, Taipei Hsien 221, Taiwan, R.O.C.

Title: CLKGEN_ICS9LPRS480

Size: A3 | Document Number: Olan | Rev: -2M

Date: Monday, May 05, 2008 | Sheet 3 of 58

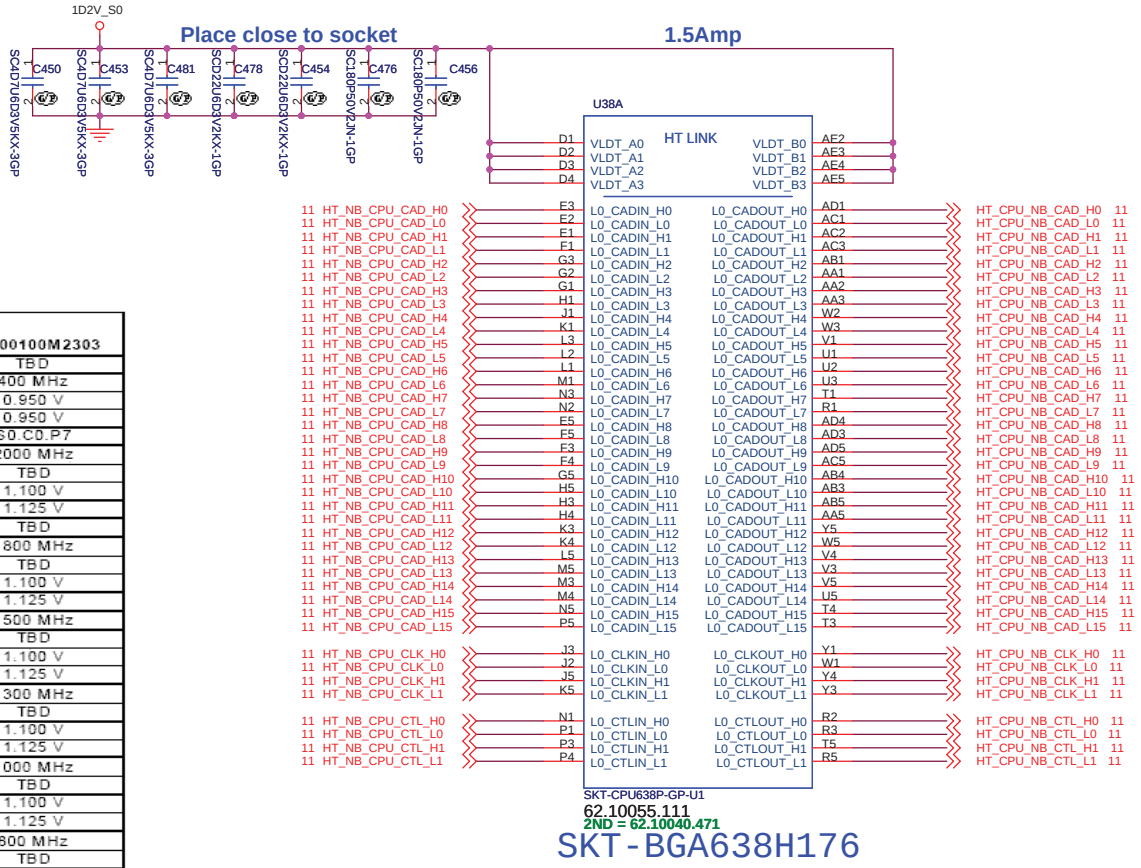

State	Specification	Notes	2M200100M2303
S0.C0.Px	Tcase Max	3	TBD
	NB COF	1	400 MHz
	VID_VDDNB Min	2	0.950 V
	VID_VDDNB Max	2	0.950 V
	Startup P-state		S0.C0.P7
S0.C0.P0	CPU COF	1	2000 MHz
	TDP	3	TBD
	VID_VDD Min	2	1.100 V
	VID_VDD Max	2	1.125 V
	IDD Max	3	TBD
S0.C0.P1	CPU COF	1	1800 MHz
	TDP	3	TBD
	VID_VDD Min	2	1.100 V
	VID_VDD Max	2	1.125 V
S0.C0.P2	CPU COF	1	1500 MHz
	TDP	3	TBD
	VID_VDD Min	2	1.100 V
	VID_VDD Max	2	1.125 V
S0.C0.P3	CPU COF	1	1300 MHz
	TDP	3	TBD
	VID_VDD Min	2	1.100 V
	VID_VDD Max	2	1.125 V
S0.C0.P4	CPU COF	1	1000 MHz
	TDP	3	TBD
	VID_VDD Min	2	1.100 V
	VID_VDD Max	2	1.125 V
S0.C0.P5	CPU COF	1	800 MHz
	TDP	3	TBD
	VID_VDD Min	2	1.100 V
	VID_VDD Max	2	1.125 V
S0.C0.P6	CPU COF	1	500 MHz
	TDP	3	TBD
	VID_VDD Min	2	1.100 V
	VID_VDD Max	2	1.125 V
S0.C0.P7	CPU COF	1	300 MHz
	TDP	3	TBD
	VID_VDD Min	2	1.100 V
	VID_VDD Max	2	1.125 V

UMA NODOCK

緯創資通 **Wistron Corporation**
21F, 88, Sec.1, Hsin Tai Wu Rd., Hsichih,
Taipei Hsien 221, Taiwan, R.O.C.

Title: ***CPU_HT_LINK I/F_(1/4)***

Size: A3 | Document Number: **Olan** | Rev: -1

Date: Friday, April 18, 2008 | Sheet 4 of 58

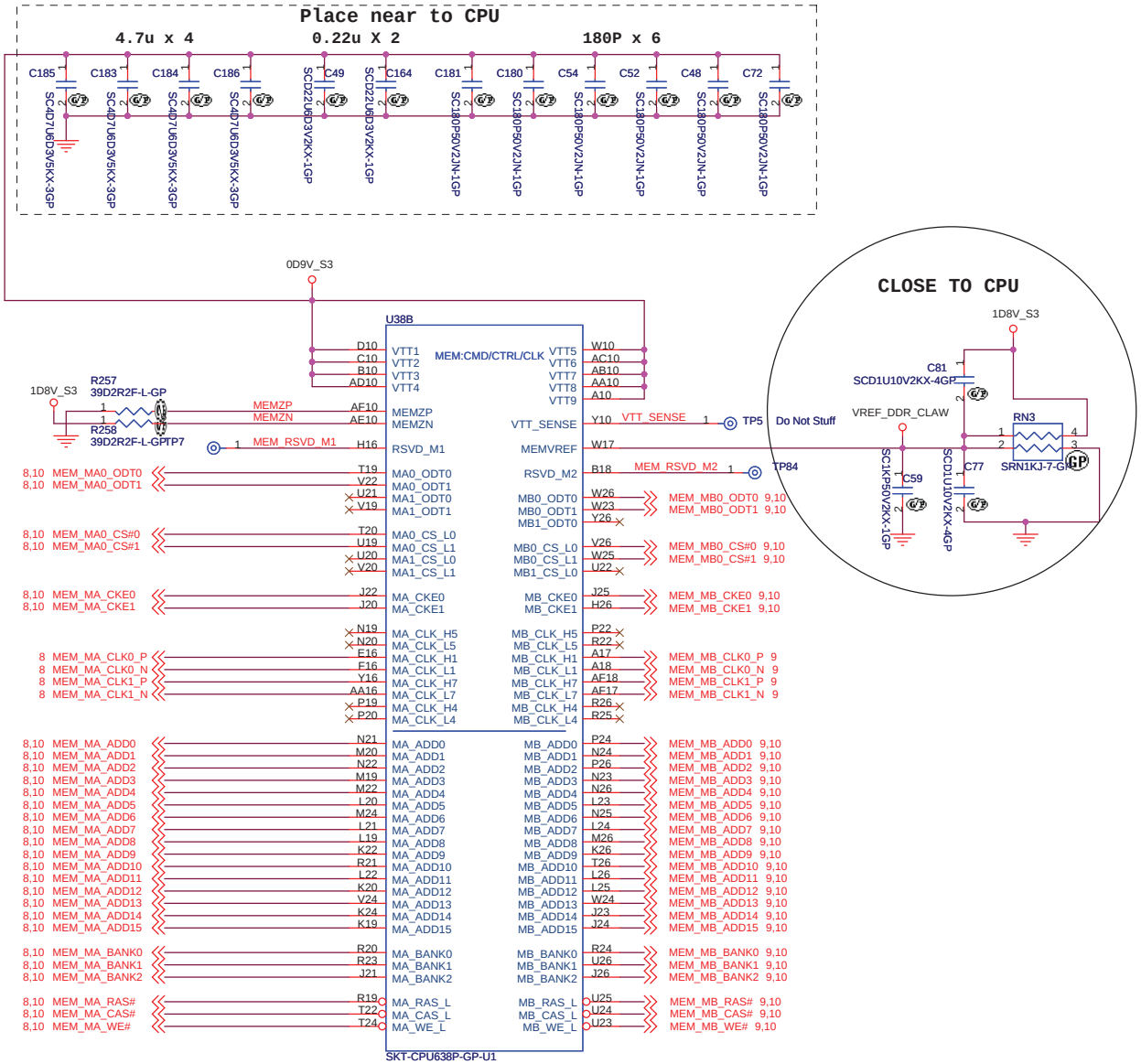

UMA NODOCK

Wistron Corporation
21F, 88, Sec.1, Hsin Tai Wu Rd., Hsichih,
Taipei Hsien 221, Taiwan, R.O.C.

Title: *CPU_DDR_(2/4)*

Size	Document Number	Rev
A3	Olan	-1

Date: Friday, April 18, 2008 Sheet 5 of 58

The Processor has reached a preset maximum operating temperature. 100℃
I=Active HTC
O=FAN

SC_0213

1D8V_S0

R304 300R2J-4-GP

RN47 SRN300J-1-GP

SB

20,57 CPU_LDT_RST# — R298 33R2J-2-GP — LDT_RST#_CPU 12

20,57 CPU_PWRGD — R297 Do Not Stuff — LDT_PWROK

20 CPU_LDT_STOP# — R296 Do Not Stuff — LDT_STP#_CPU 12

12,20 ALLOW_LDTSTOP — R299 Do Not Stuff — CPU_LDT_REQ#_CPU

SB with 0402 PAD

IF 0 ohm IS NOT GOOD ENOUGH, TRY 68.00082.491

LYAOUT:ROUTE VDDA TRACE APPROX. 50mils WIDE(USE 2X25 mil TRACES TO EXIT BALL FIELD) AND 500 mils LONG.

2D5V_S0 — R136 Do Not Stuff — 2D5V_VDDA_S0

SC_0205

C158 SC10U10V5ZY-1GP, C159 SC10U10V5ZY-1GP, C306 SC4D7U10V5ZY-3GP, C160 SC3300P50V2KX-1GP, C149 SC10U10V5ZY-1GP, SCD22U16V3ZY-GP

Cloce To CPU

3 CPU_CLK — C489 SC3900P50V2KX-2GP — R294 169R2F-GP — CLKCPU_IN

3 CPU_CLK# — C490 SC3900P50V2KX-2GP — CLKCPU# IN

LDT_RST# CPU

HDT_RST# — R94 Do Not Stuff

For HDT DBG

LDT_PWROK

LDT_STP# CPU

CPU_LDT_REQ# CPU

Do Not Stuff TP72 — CPU_SIC

Do Not Stuff TP75 — CPU_SID

Do Not Stuff TP79 — CPU_ALERT#

1D2V_S0 — R80 44D2R2F-GP, R82 44D2R2F-GP — CPU_HTREF0, CPU_HTREF1

50 CPU_VDD0_RUN_FB_H, 50 CPU_VDD0_RUN_FB_L

50 CPU_VDD1_RUN_FB_H, 50 CPU_VDD1_RUN_FB_L

CPU_DBRDY, CPU_TMS, CPU_TCK, CPU_TRST#, CPU_TDI

TP74 — CPU_TEST23

TP11 — CPU_TEST18

TP12 — CPU_TEST19

TP15 — CPU_TEST25_H

TP14 — CPU_TEST25_L

SB

TP2 — CPU_TEST21

TP73

TP76 — CPU_TEST20

TP78 — CPU_TEST22

TP1 — CPU_TEST12

TP77 — CPU_TEST27

R495 300R2J-4-GP, R494 300R2J-4-GP

R290 Do Not Stuff — CPU_TEST9

SC_0205

U38D

Pin	Signal	Pin	Signal
F8	VDDA1	M11	KEY1
F9	VDDA2	W18	KEY2
A9	CLKIN_H	A6	SVC
A8	CLKIN_L	A4	SVD
B7	RESET_L		
A7	PWROK		
F10	LDTSTOP_L	AF6	THERMTRIP_L
C6	LDTREQ_L	AC7	PROCHOT_L
		AA8	MEMHOT_L
AF4	SIC		
AF5	SID		
AE6	ALERT_L	W7	THERMDC
		W8	THERMDA
R6	HT_REF0		
P6	HT_REF1		
F6	VDD0_FB_H	W9	VDDIO_FB_H
E6	VDD0_FB_L	Y9	VDDIO_FB_L
Y6	VDD1_FB_H	H6	VDDNB_FB_H
AB6	VDD1_FB_L	G6	VDDNB_FB_L
G10	DBRDY		
AA9	TMS	E10	DBREQ_L
AC9	TCK		
AD9	TRST_L	AF9	TDO
AF9	TDI		
AD7	TEST23	J7	TEST28_H
		H8	TEST28_L
H10	TEST18		
G9	TEST19	D7	TEST17
		E7	TEST16
F9	TEST25_H	F7	TEST15
E8	TEST25_L	C7	TEST14
AB8	TEST21	C3	TEST7
AF7	TEST20	K8	TEST10
AE7	TEST24		
AE8	TEST22	C4	TEST8
AC8	TEST12		
AF8	TEST27		
		C9	TEST29_H
C2	TEST9	C8	TEST29_L
AA6	TEST6		
A3	RSVD1	H18	RSVD10
A5	RSVD2	H19	RSVD9
B3	RSVD3	AA7	RSVD8
B5	RSVD4	D5	RSVD7
C1	RSVD5	C5	RSVD6

SKT-CPU638P-GP-U1

1D8V_S3 — RN71 SRN1KJ-7-GP — CPU_SVC 50, CPU_SVD 50

SB

1D8V_S3 — RN64 SRN300J-1-GP — CPU_DBREQ#

THERMTRIP# — PROCHOT# — CPU_MEMHOT#

R246 Do Not Stuff — PROCHOT#_SB 20

internal pull high 300 ohm

H_THERMDC 25, H_THERMDA 25

DY C76 Do Not Stuff

CPU_VDDIO_SUS_FB_H — TP6, CPU_VDDIO_SUS_FB_L — TP3

CPU_VDDNB_RUN_FB_H 50, CPU_VDDNB_RUN_FB_L 50

CPU_DBREQ# — CPU_TDO

LAYOUT: Route FBCLKOUT_H/L differentially impedance 80

CPU_TEST28_H — TP8, CPU_TEST28_L — TP10

CPU_TEST17 — TP16, CPU_TEST16 — TP13, CPU_TEST15 — TP9, CPU_TEST14 — TP18

CPU_TEST29H — TP19, CPU_TEST29L — TP17

1D8V_S3 — R306 2K2R2J-2-GP — LDT_PWROK_G

3D3V_S0 — R308 10KR2J-3-GP

Q17 MMBT3904-3-GP 84.03904.T11 — LDT_PWROK

50 CPU_PWRGD_SVID_REG

2ND = 84.03904.H11

C484 DY Do Not Stuff

Near CPU PIN

LDT_PWROK — R291 2K2R2J-2-GP — C483 SCD1U16V2ZY-2GP

1D8V_SUS_Q2

Q15 MMBT3904-3-GP 84.03904.T11 — THERMTRIP# — KBC_THERMTRIP# 25,43

2ND = 84.03904.H11

CPU exceeds to 125℃

HDT Connectors

HDT1 DY

CPU_DBREQ#, CPU_DBRDY, CPU_TCK, CPU_TMS, CPU_TDI, CPU_TRST#, CPU_TDO

1D8V_S3

Do Not Stuff

HDT_RST#

UMA NODOCK

緯創資通 Wistron Corporation
21F, 88, Sec.1, Hsin Tai Wu Rd., Hsichih, Taipei Hsien 221, Taiwan, R.O.C.

Title: CPU_Control&Debug_(3/4)

Size: A3 | Document Number: Olan | Rev: -2M

Date: Monday, May 05, 2008 | Sheet 6 of 58

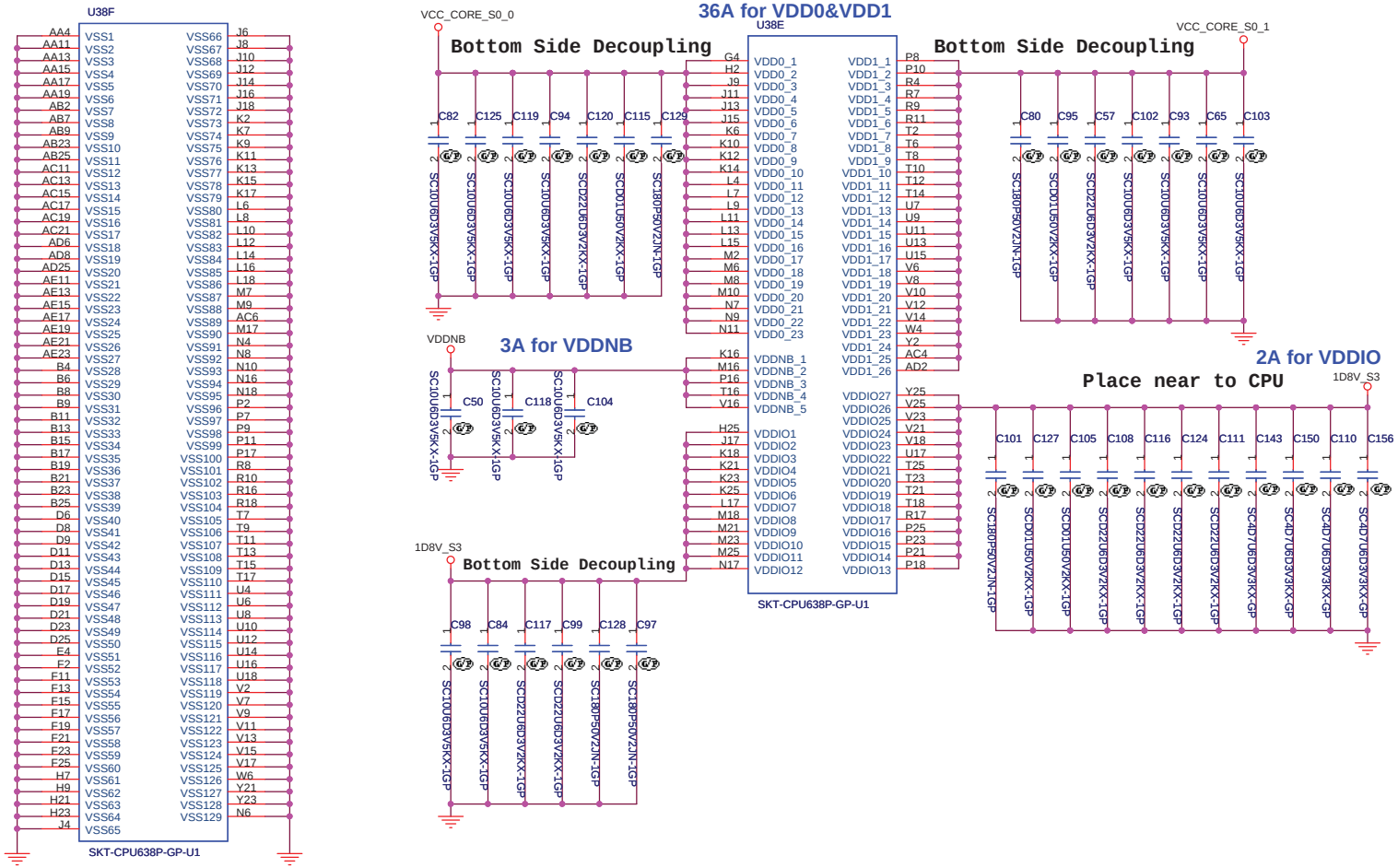

UMA NODOCK

Wistron Corporation
21F, 88, Sec.1, Hsin Tai Wu Rd., Hsichih,
Taipei Hsien 221, Taiwan, R.O.C.

Title: *CPU_Power_(4/4)*

Size	Document Number	Rev
A3	Olan	-1

Date: Friday, April 18, 2008 Sheet 7 of 58

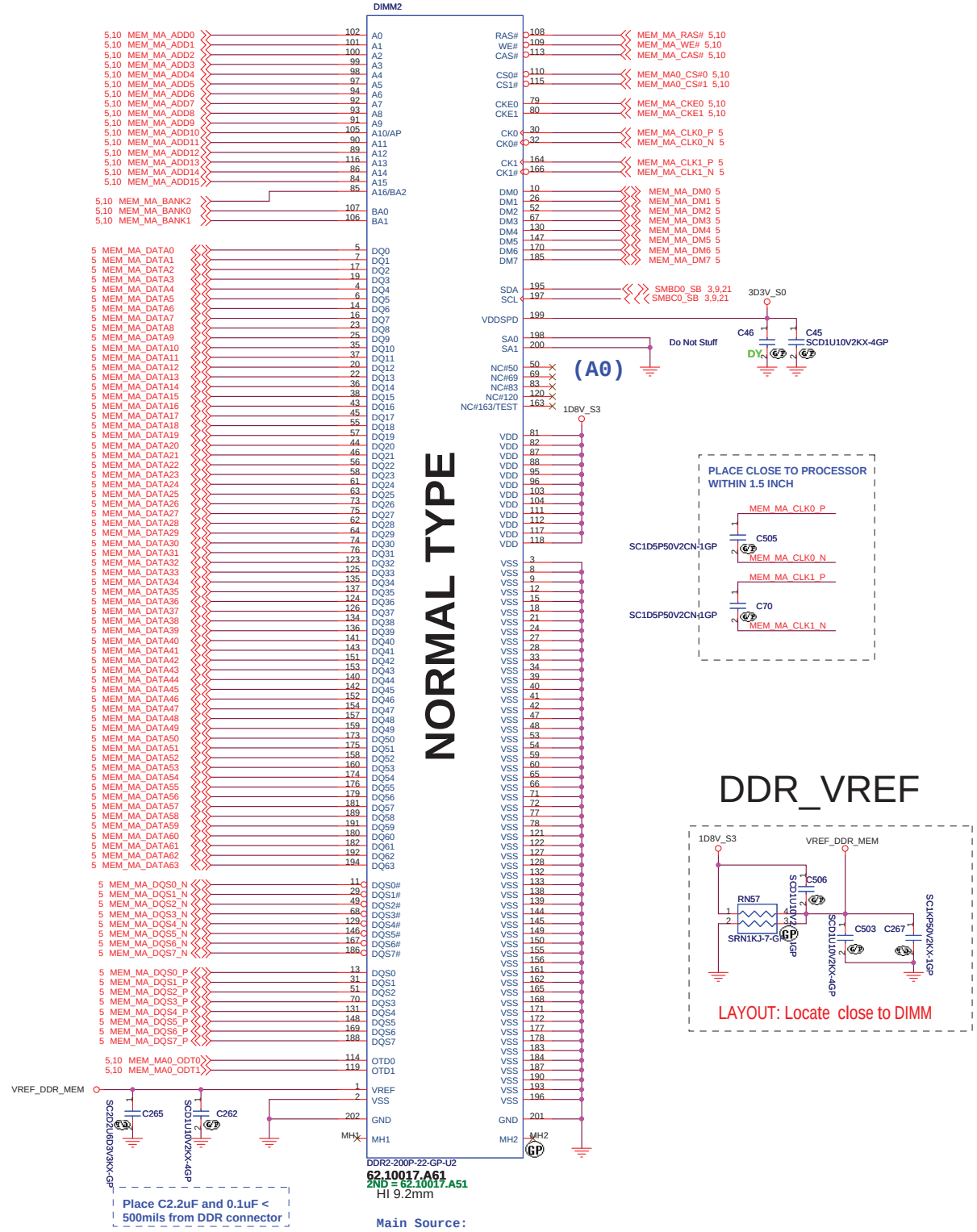

UMA NODOCK

Wistron Corporation
21F, 88, Sec.1, Hsin Tai Wu Rd., Hsichih,
Taipei Hsien 221, Taiwan, R.O.C.

Title: ***DDR_SO-DIMM SKT_1***

Size	Document Number	Rev
Custom	Olan	-1

Date: Friday, April 18, 2008 | Sheet 8 of 58

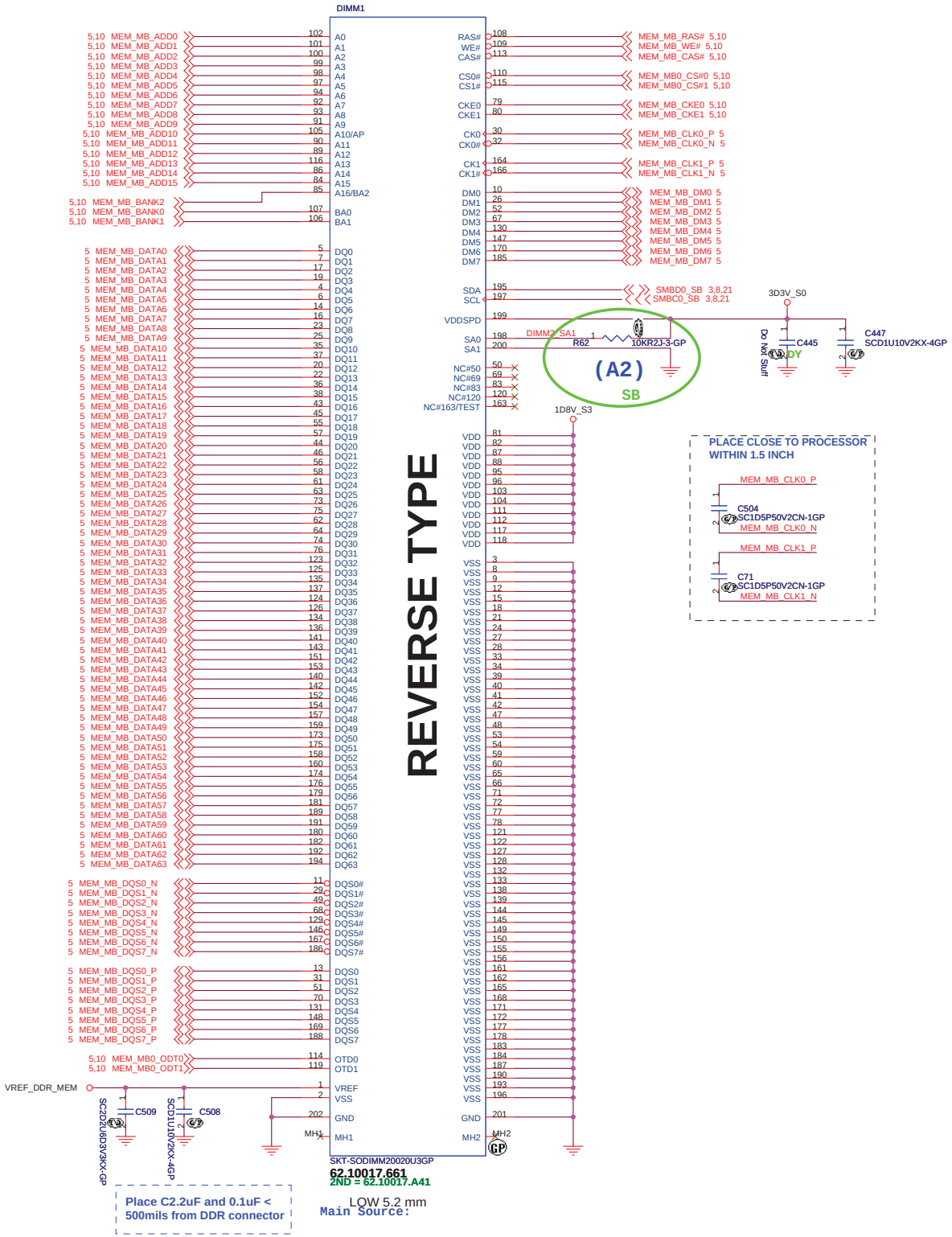

UMA NODOCK

緯創資通 **Wistron Corporation**
21F, 88, Sec.1, Hsin Tai Wu Rd., Hsichih, Taipei Hsien 221, Taiwan, R.O.C.

Title	***DDR_SO-DIMM SKT_2***		
Size: Custom	Document Number: **Olan**		Rev: -2M
Date: Monday, May 05, 2008	Sheet 9	of	58

PARALLEL TERMINATION

Put decap near power(0.9V) and pull-up resistor

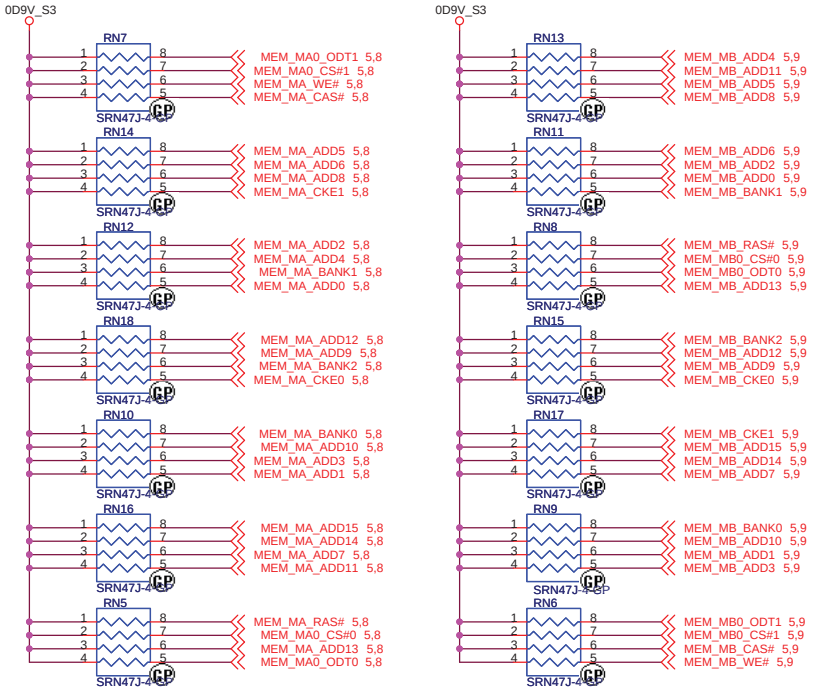

Do not share the Term resistor between the DDR addess and Control Signals.

Decoupling Capacitor

Put decap near power(0.9V) and pull-up resistor

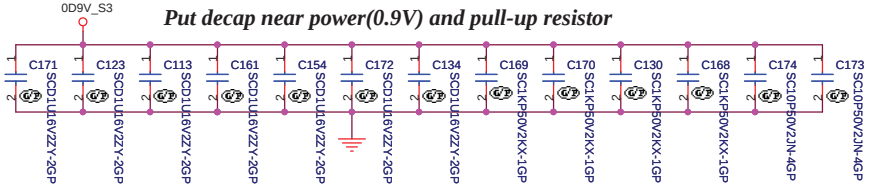

Place these Caps near DM1

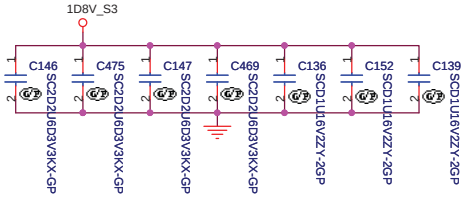

Layout Note:
Place one cap close to every 2 pullup resistors terminated to 0D9V_S3

Place these Caps near DM2

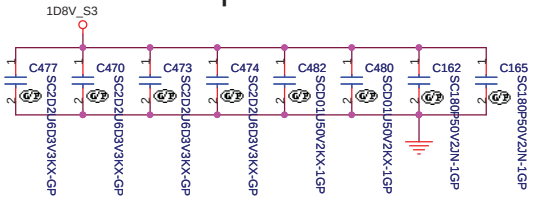

Layout Note:
Place one cap close to every 2 pullup resistors terminated to 0D9V_S3

Place these Caps near PARALLEL TERMINATION

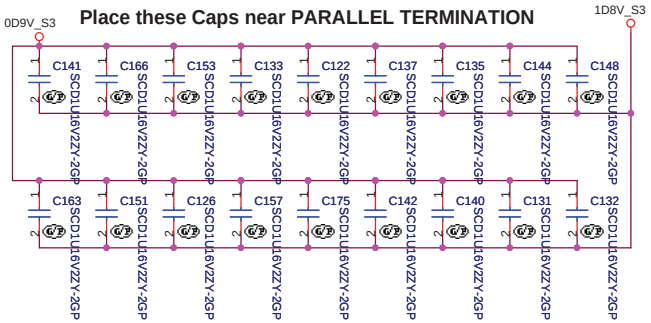

UMA NODOCK

緯創資通 **Wistron Corporation**
21F, 88, Sec.1, Hsin Tai Wu Rd., Hsichih,
Taipei Hsien 221, Taiwan, R.O.C.

Title	***DDR_DAMPING & TERMINATION***	
Size A3	Document Number **Olan**	Rev -1
Date: Friday, April 18, 2008	Sheet 10 of 58	

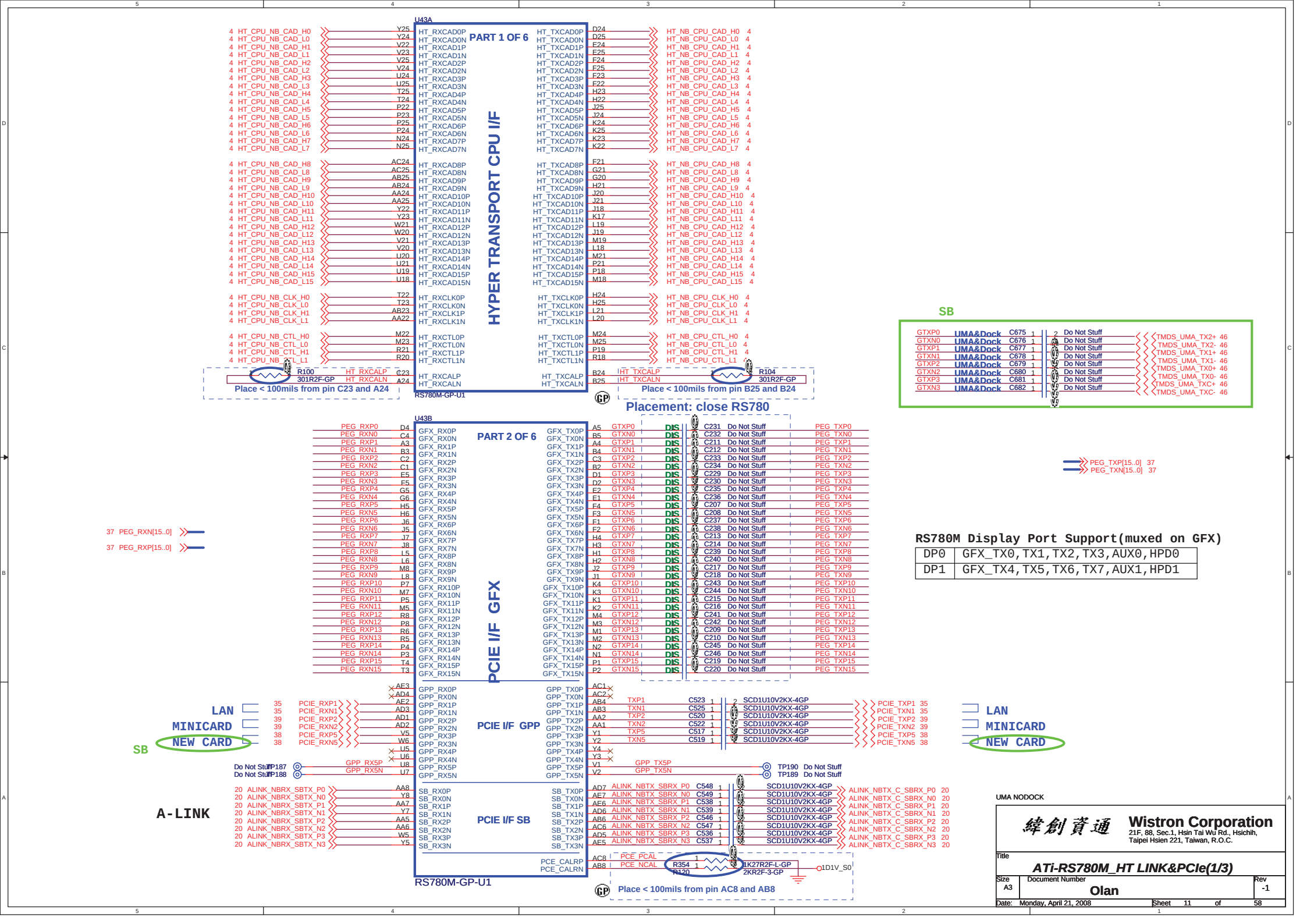
U43A
PART 1 OF 6
HYPER TRANSPORT CPU I/F
RS780M-GP-U1
Place < 100mils from pin C23 and A24
Place < 100mils from pin B25 and B24
Placement: close RS780
SB
U43B
PART 2 OF 6
PCIE I/F GFX
PCIE I/F GPP
PCIE I/F SB
RS780M-GP-U1
Place < 100mils from pin AC8 and AB8
LAN
MINICARD
NEW CARD
SB
A-LINK
RS780M Display Port Support(muxed on GFX)
DP0 GFX_TX0,TX1,TX2,TX3,AUX0,HPD0
DP1 GFX_TX4,TX5,TX6,TX7,AUX1,HPD1
UMA NODOCK
Wistron Corporation
21F, 88, Sec.1, Hsin Tai Wu Rd., Hsichih, Taipei Hsien 221, Taiwan, R.O.C.
Title
ATi-RS780M_HT LINK&PCIe(1/3)
Size A3
Document Number
Olan
Rev -1
Date: Monday, April 21, 2008
Sheet 11 of 58

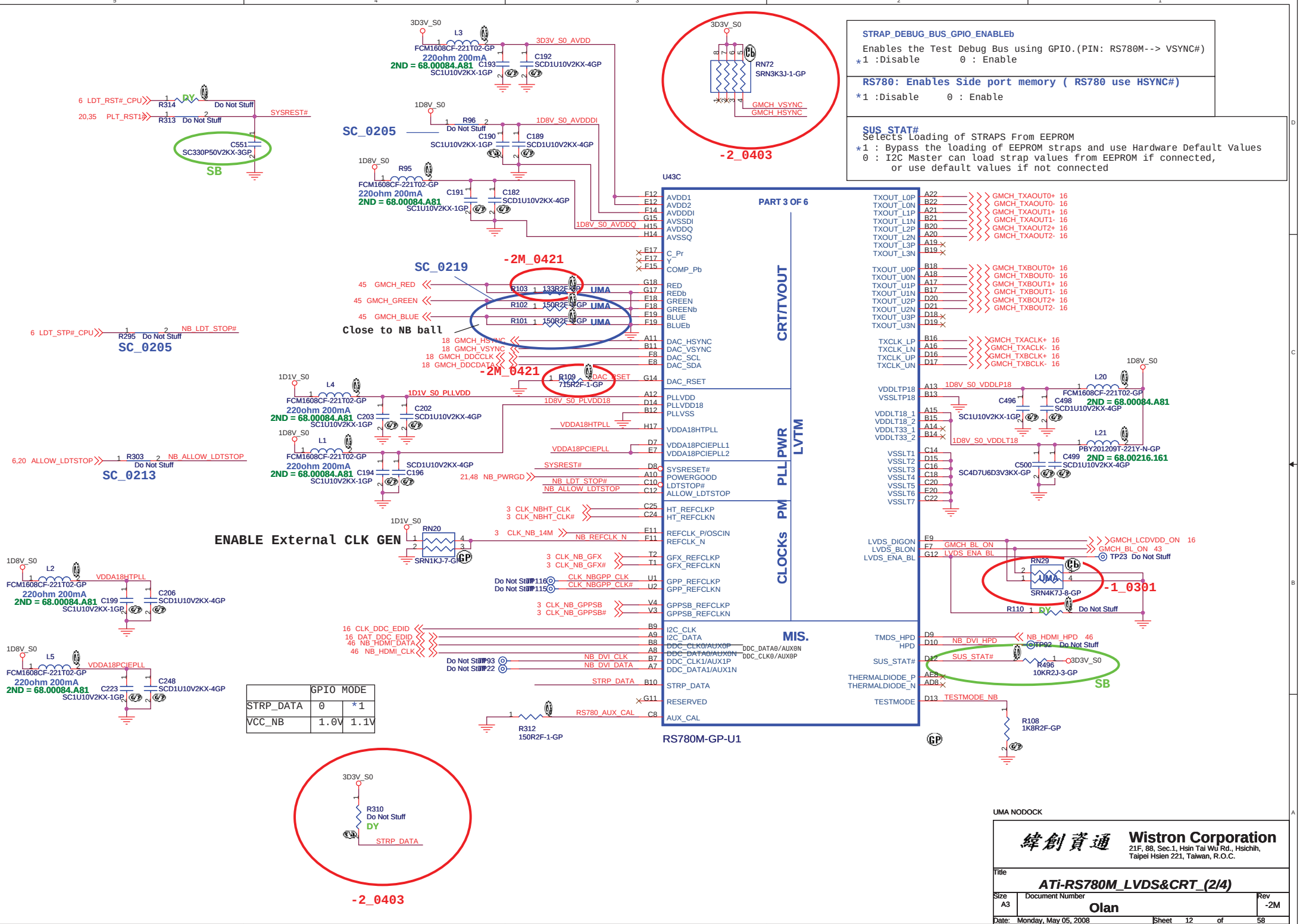
STRAP_DEBUG_BUS_GPIO_ENABLEb
Enables the Test Debug Bus using GPIO.(PIN: RS780M--> VSYNC#)
*1 :Disable 0 : Enable
RS780: Enables Side port memory (RS780 use HSYNC#)
*1 :Disable 0 : Enable
SUS_STAT#
Selects Loading of STRAPS From EEPROM
*1 : Bypass the loading of EEPROM straps and use Hardware Default Values
0 : I2C Master can load strap values from EEPROM if connected,
or use default values if not connected
SC_0205
SC_0219
SC_0213
-2M_0421
-2_0403
-1_0301
Close to NB ball
ENABLE External CLK GEN
U43C
PART 3 OF 6
CRT/TVOUT
LVTM
PWR
PLL
PM
CLOCKs
MIS.
RS780M-GP-U1
UMA NODOCK
Wistron Corporation
21F, 88, Sec.1, Hsin Tai Wu Rd., Hsichih,
Taipei Hsien 221, Taiwan, R.O.C.
Title
ATi-RS780M_LVDS&CRT_(2/4)
Size A3
Document Number Olan
Rev -2M
Date: Monday, May 05, 2008
Sheet 12 of 58

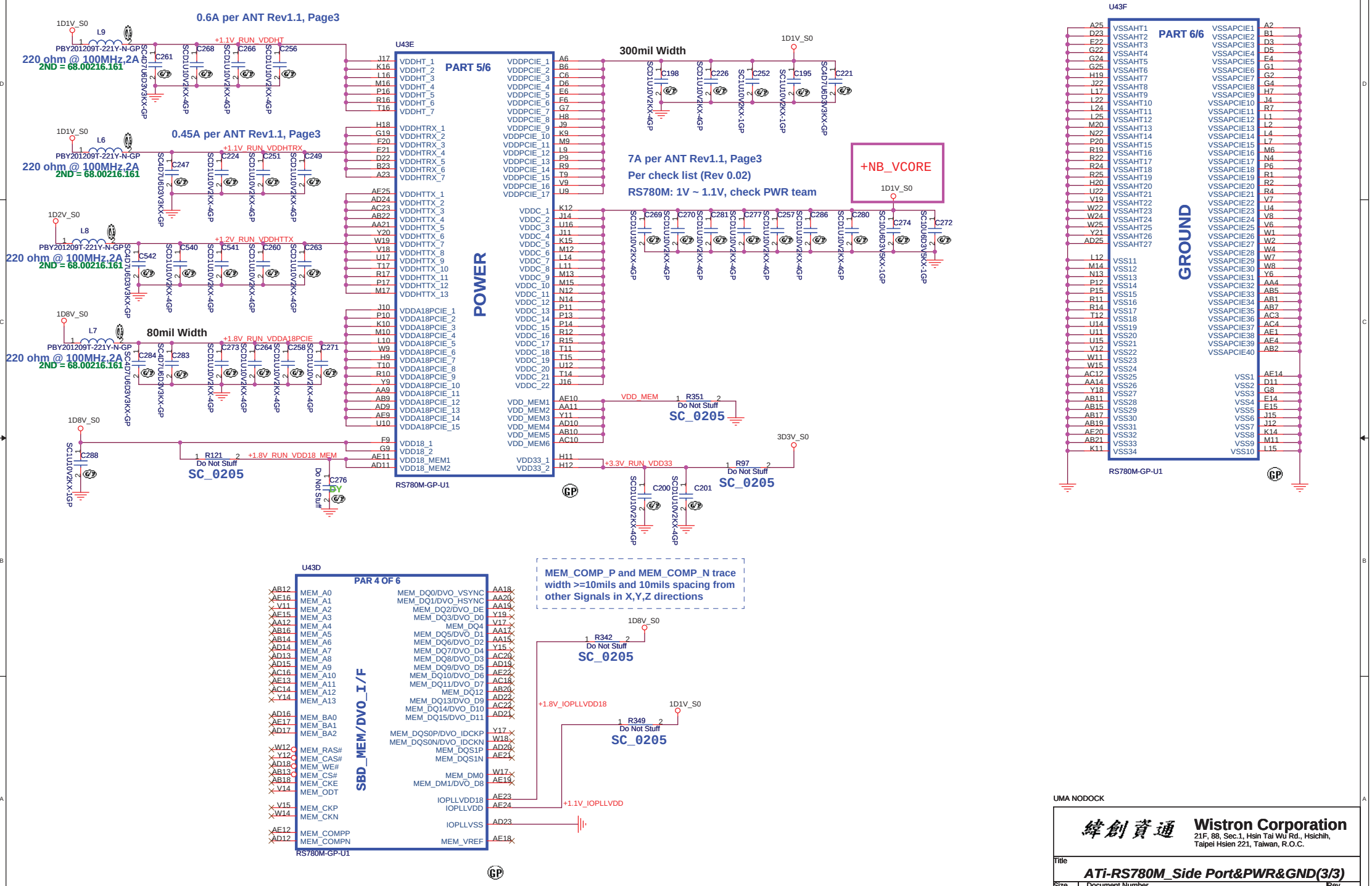

UMA NODOCK

Wistron Corporation
21F, 88, Sec.1, Hsin Tai Wu Rd., Hsichih, Taipei Hsien 221, Taiwan, R.O.C.

Title: ATi-RS780M_Side Port&PWR&GND(3/3)

Size	Document Number	Rev
A3	Olan	-1

Date: Monday, April 21, 2008 Sheet 13 of 58

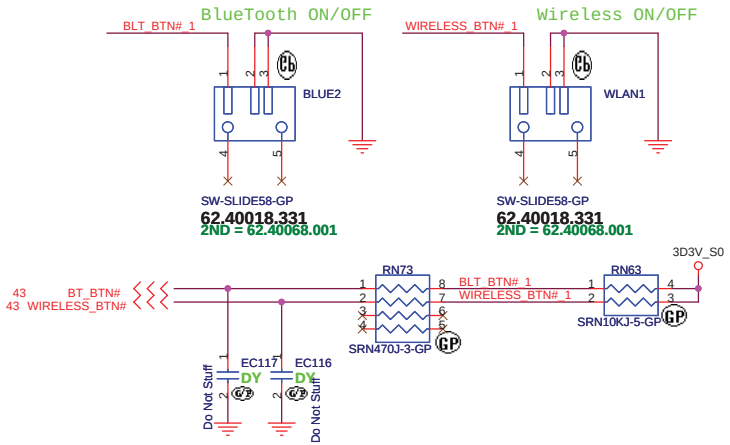

UMA NODOCK

緯創資通 **Wistron Corporation**
21F, 88, Sec.1, Hsin Tai Wu Rd., Hsichih,
Taipei Hsien 221, Taiwan, R.O.C.

Title	***SWITCH***	
Size A3	Document Number **Olan**	Rev -1
Date: Friday, April 18, 2008	Sheet 14 of 58	

LAUNCH

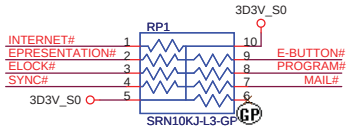

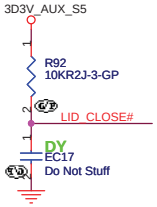

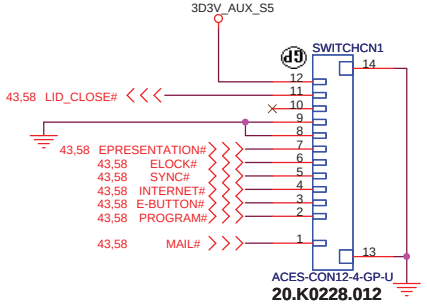

SB_0108_change 2nd source

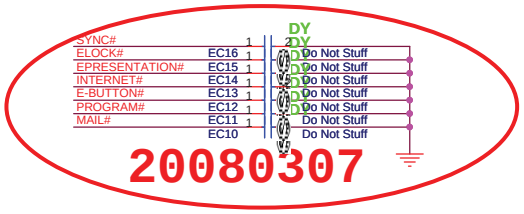

UMA NODOCK

緯創資通 **Wistron Corporation**
21F, 88, Sec.1, Hsin Tai Wu Rd., Hsichih,
Taipei Hsien 221, Taiwan, R.O.C.

Title		
	LAUNCH	
Size A3	Document Number **Olan**	Rev -1
Date: Friday, April 18, 2008	Sheet 15 of 58	

LCD/INVERTER/CCD CONN

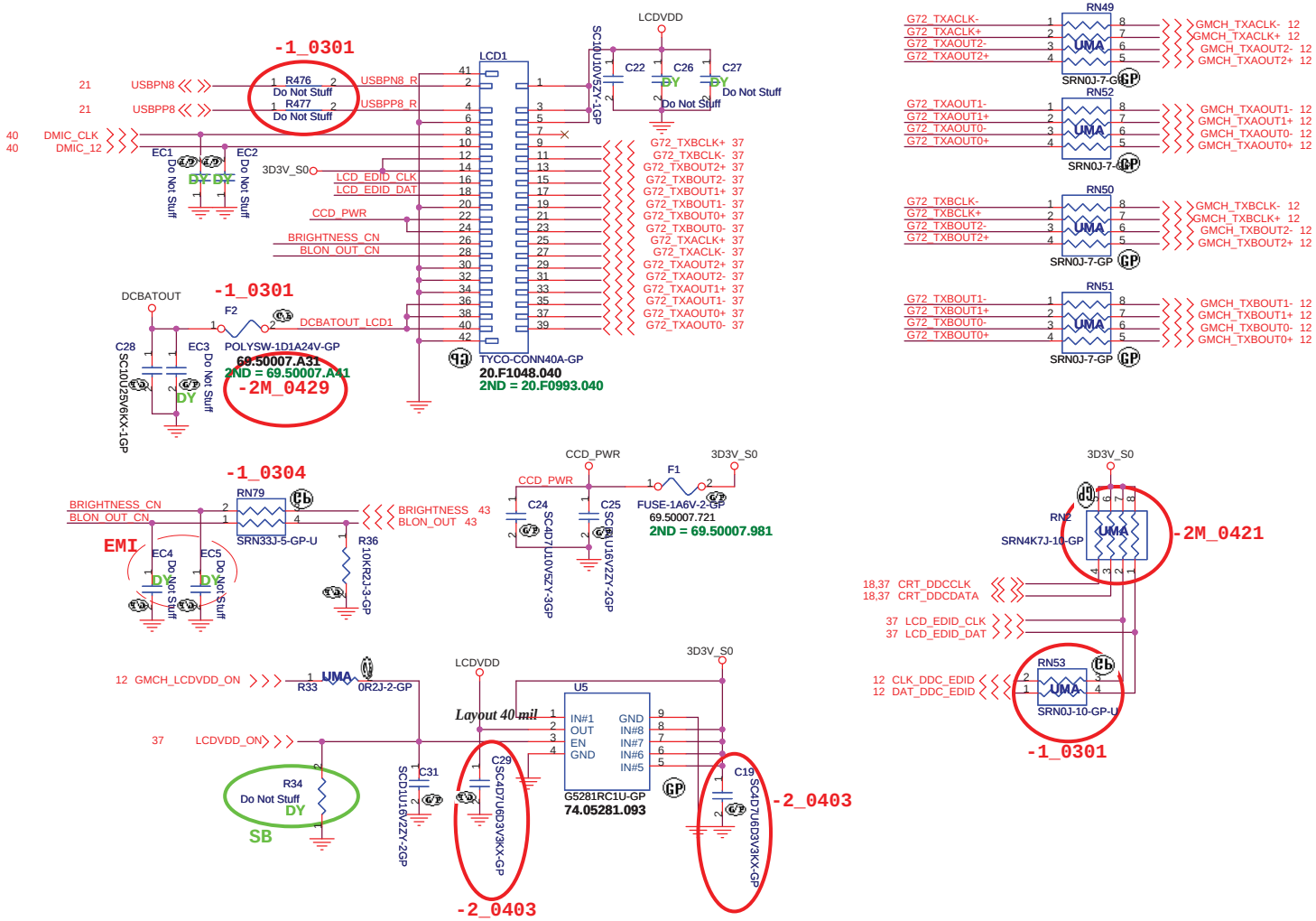

UMA NODOCK

緯創資通	**Wistron Corporation** 21F, 88, Sec.1, Hsin Tai Wu Rd., Hsichih, Taipei Hsien 221, Taiwan, R.O.C.
Title	***LCD CONN***
Size: A3	Document Number: **Olan**
Rev: -2M	
Date: Monday, May 05, 2008	Sheet 16 of 58

LED

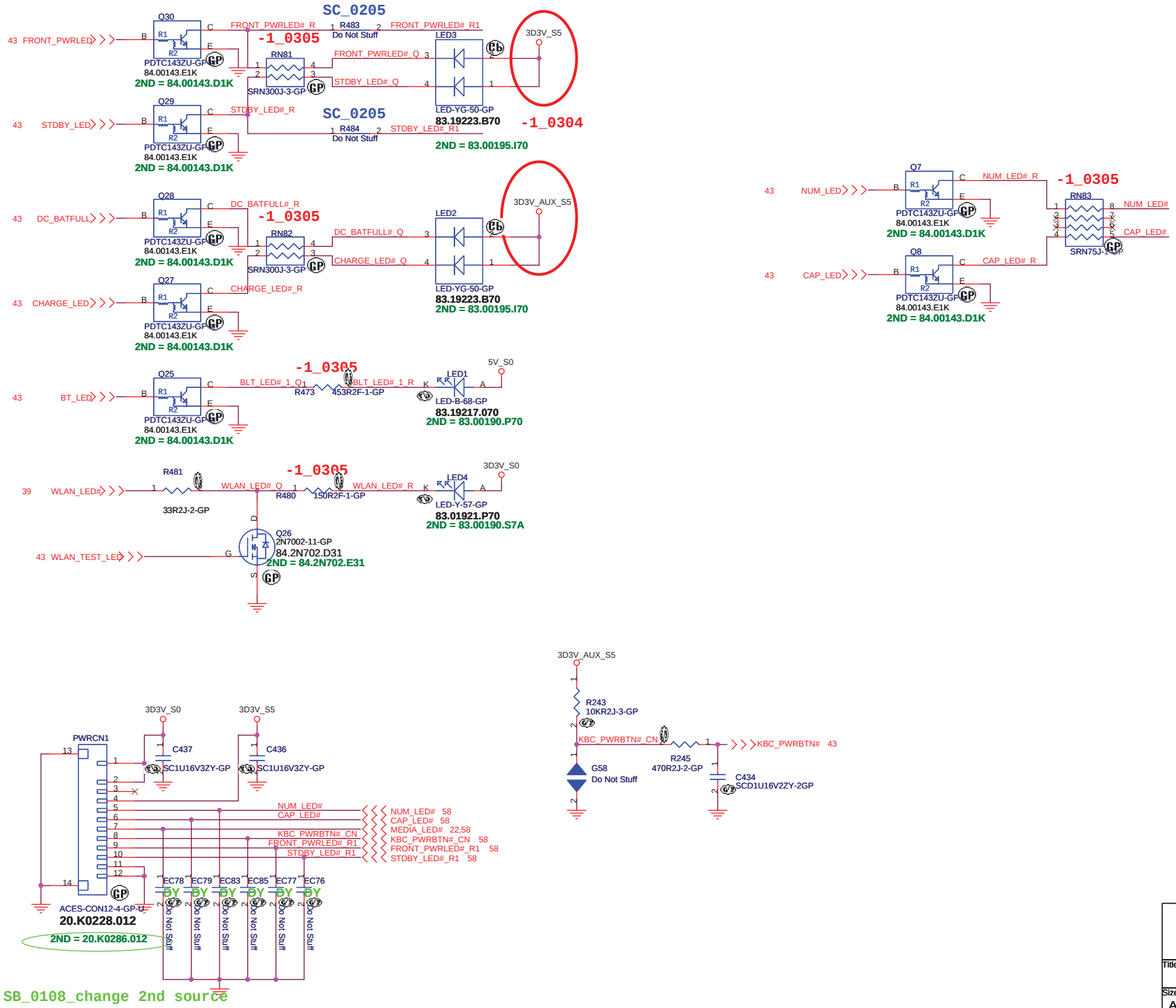

緯創資通	**Wistron Corporation** 21F, 88, Sec.1, Hsin Tai Wu Rd., Hsichih, Taipei Hsien 221, Taiwan, R.O.C.	
Title	***LED & LAUNCH***	
Size: A3	Document Number: **Olan**	Rev: -2M
Date: Monday, May 05, 2008	Sheet 17 of 58	

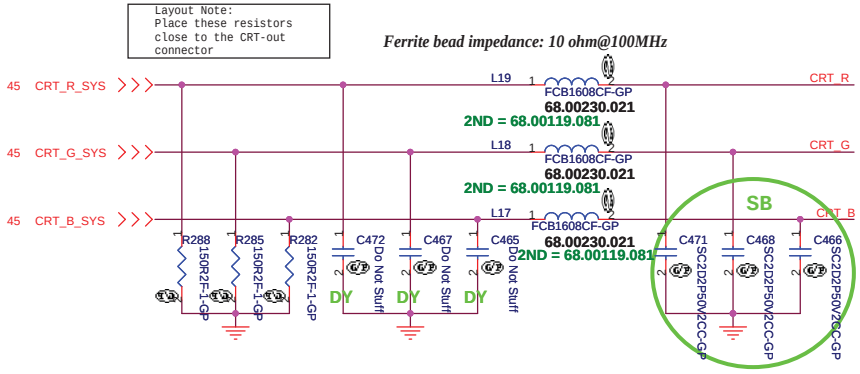

Layout Note:
** Must be a ground return path between this ground and the ground on the VGA connector.*
Pi-filter & 150 Ohm pull-down resistors should be as close as to CRT CONN. RGB will hit 75 Ohm first, pi-filter, then CRT CONN.

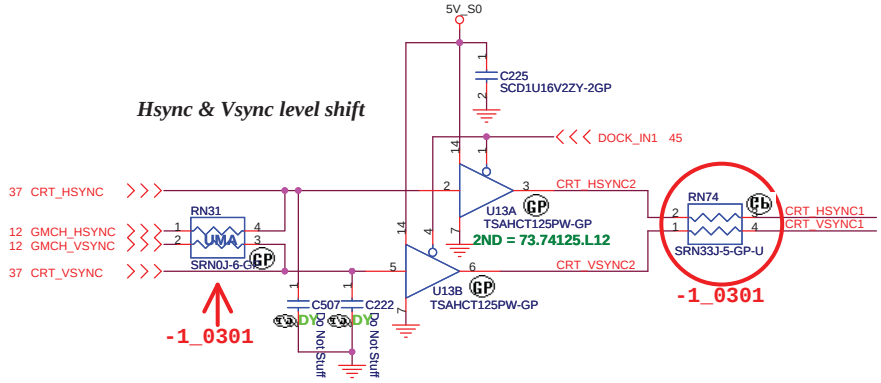

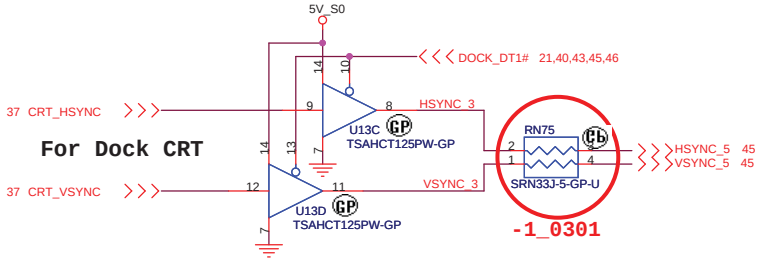

CRT I/F & CONNECTOR

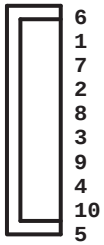

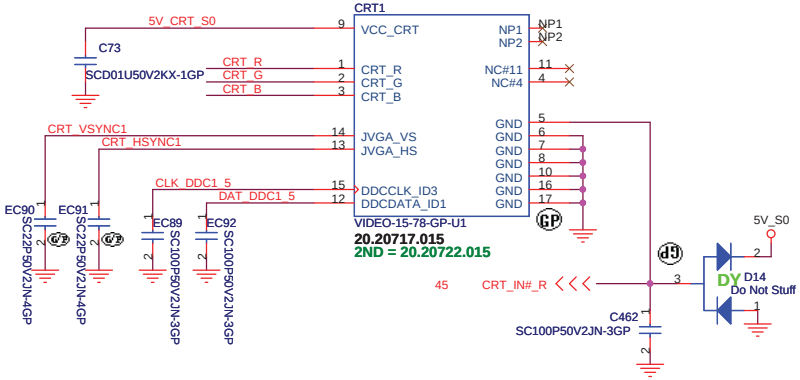

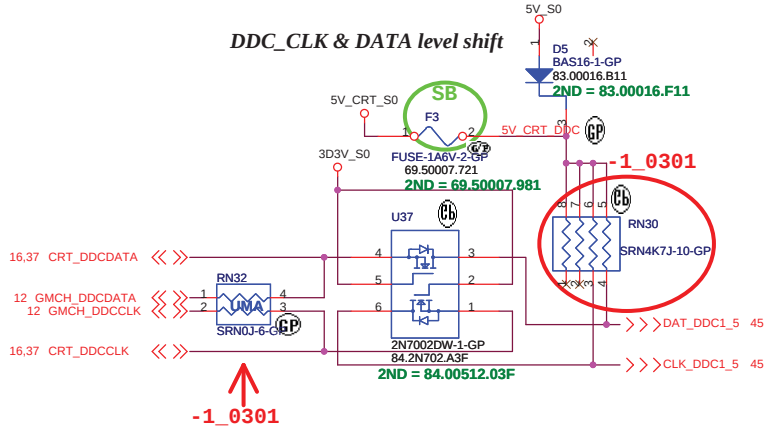

UMA NODOCK

緯創資通 **Wistron Corporation**
21F, 88, Sec.1, Hsin Tai Wu Rd., Hsichih,
Taipei Hsien 221, Taiwan, R.O.C.

Title		
	CRT Connector	
Size	Document Number	Rev
	Olan	-2M

Date: Monday, May 05, 2008 Sheet 18 of 58

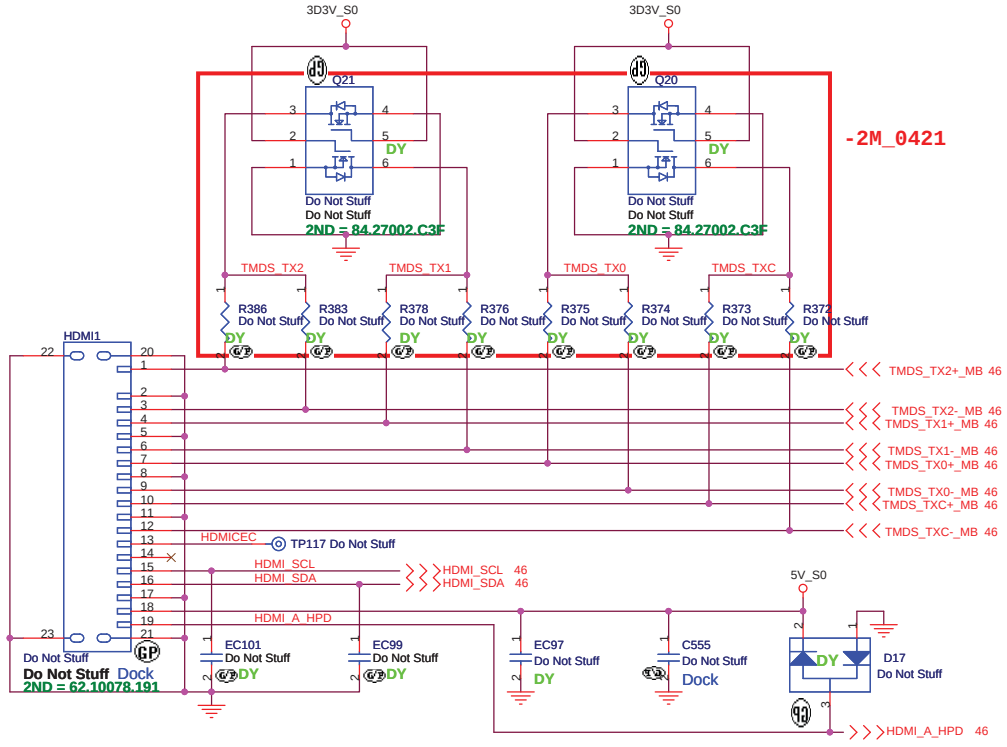

UMA NODOCK

緯創資通 **Wistron Corporation**
21F, 88, Sec.1, Hsin Tai Wu Rd., Hsichih,
Taipei Hsien 221, Taiwan, R.O.C.

Title: **HDMI CONNECTOR**

Size	Document Number	Rev
A3	Olan	-1

Date: Monday, April 21, 2008 Sheet 19 of 58

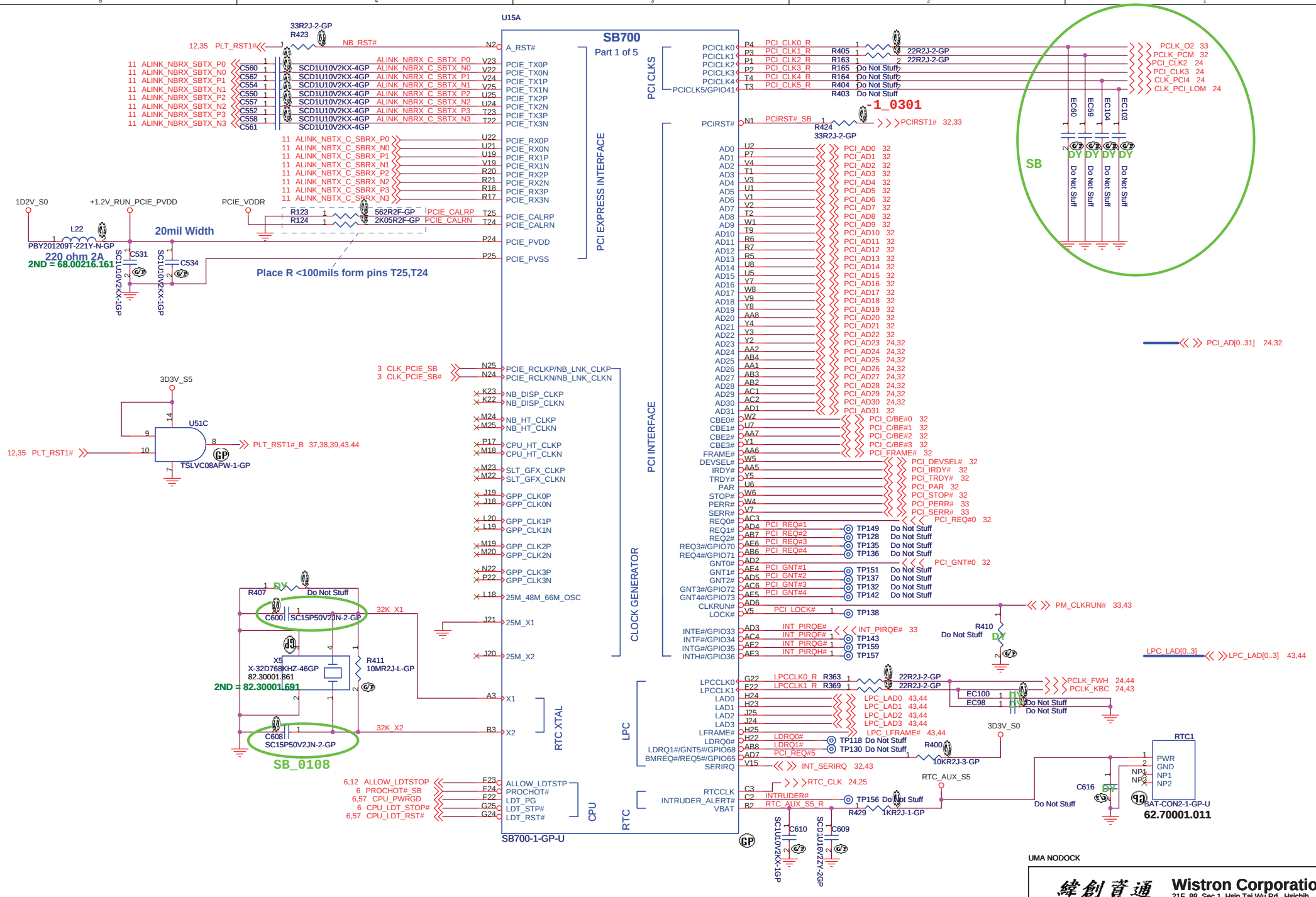
U15A
SB700
Part 1 of 5
PCI CLKS
PCI EXPRESS INTERFACE
PCI INTERFACE
CLOCK GENERATOR
LPC
RTC XTAL
CPU
RTC
SB700-1-GP-U
-1_0301
SB
20mil Width
220 ohm 2A
2ND = 68.00216.161
Place R <100mils form pins T25,T24
2ND = 82.30001.691
SB_0108
62.70001.011
UMA NODOCK
Wistron Corporation
21F, 88, Sec.1, Hsin Tai Wu Rd., Hsichih,
Taipei Hsien 221, Taiwan, R.O.C.
Title
ATi-SB700_PCIE&PCI_(1/5)
Size A3
Document Number
Olan
Rev -2M
Date: Monday, May 05, 2008
Sheet 20 of 58

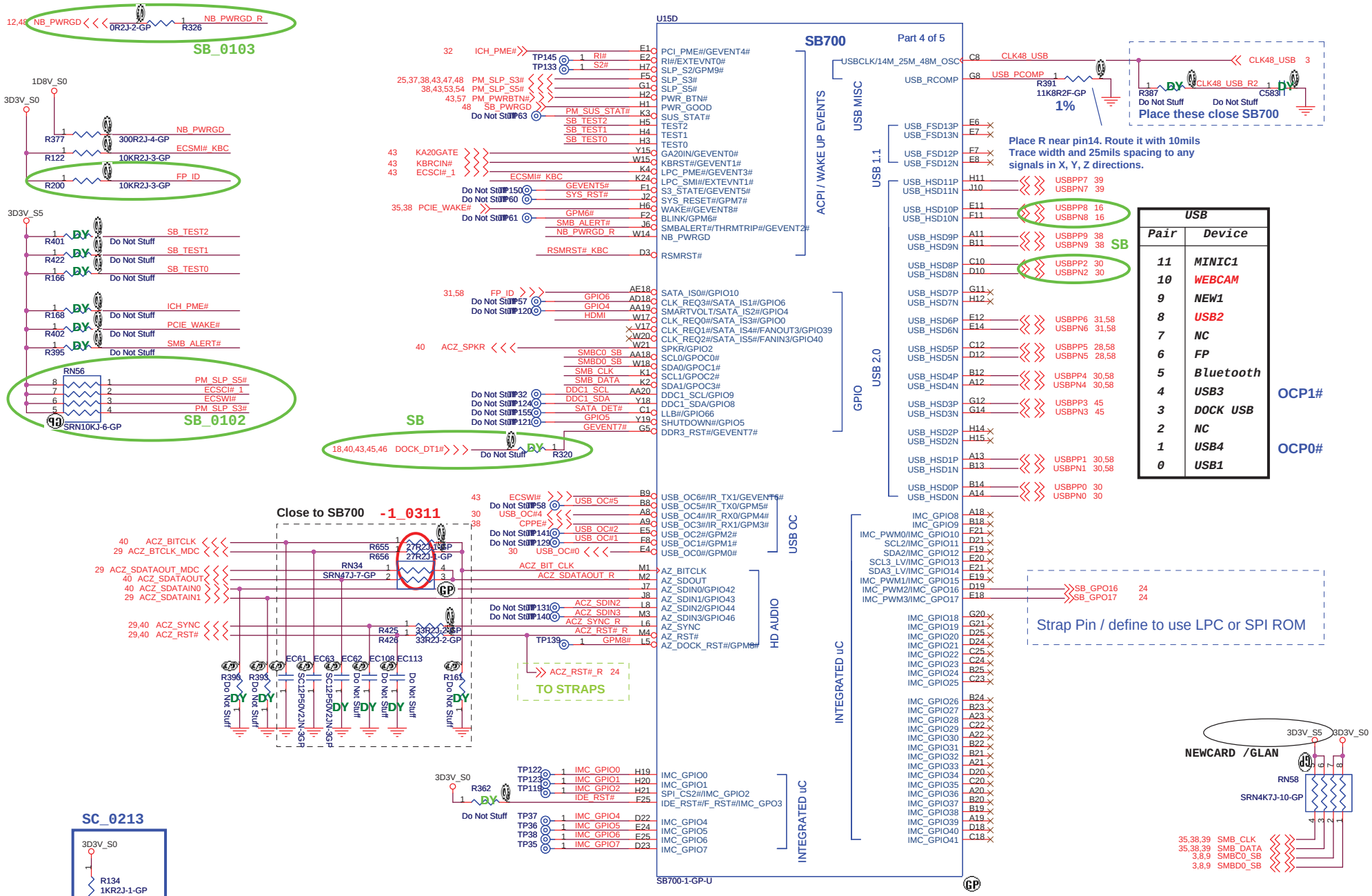
SB_0103
SB_0102
SB700
Part 4 of 5
U15D
SB700-1-GP-U
Place these close SB700
Place R near pin14. Route it with 10mils Trace width and 25mils spacing to any signals in X, Y, Z directions.
USB
Pair Device
11 MINICI1
10 WEBCAM
9 NEW1
8 USB2
7 NC
6 FP
5 Bluetooth
4 USB3
3 DOCK USB
2 NC
1 USB4
0 USB1
OCP1#
OCP0#
Close to SB700
-1_0311
Strap Pin / define to use LPC or SPI ROM
TO STRAPS
NEWCARD /GLAN
SC_0213
NoDock
Dock
UMA NODOCK
Wistron Corporation
21F, 88, Sec.1, Hsin Tai Wu Rd., Hsichih, Taipei Hsien 221, Taiwan, R.O.C.
Title
ATi-SB700_USB&GPIO_(2/5)
Size A3
Document Number Olan
Rev -2M
Date: Monday, May 05, 2008
Sheet 21 of 58

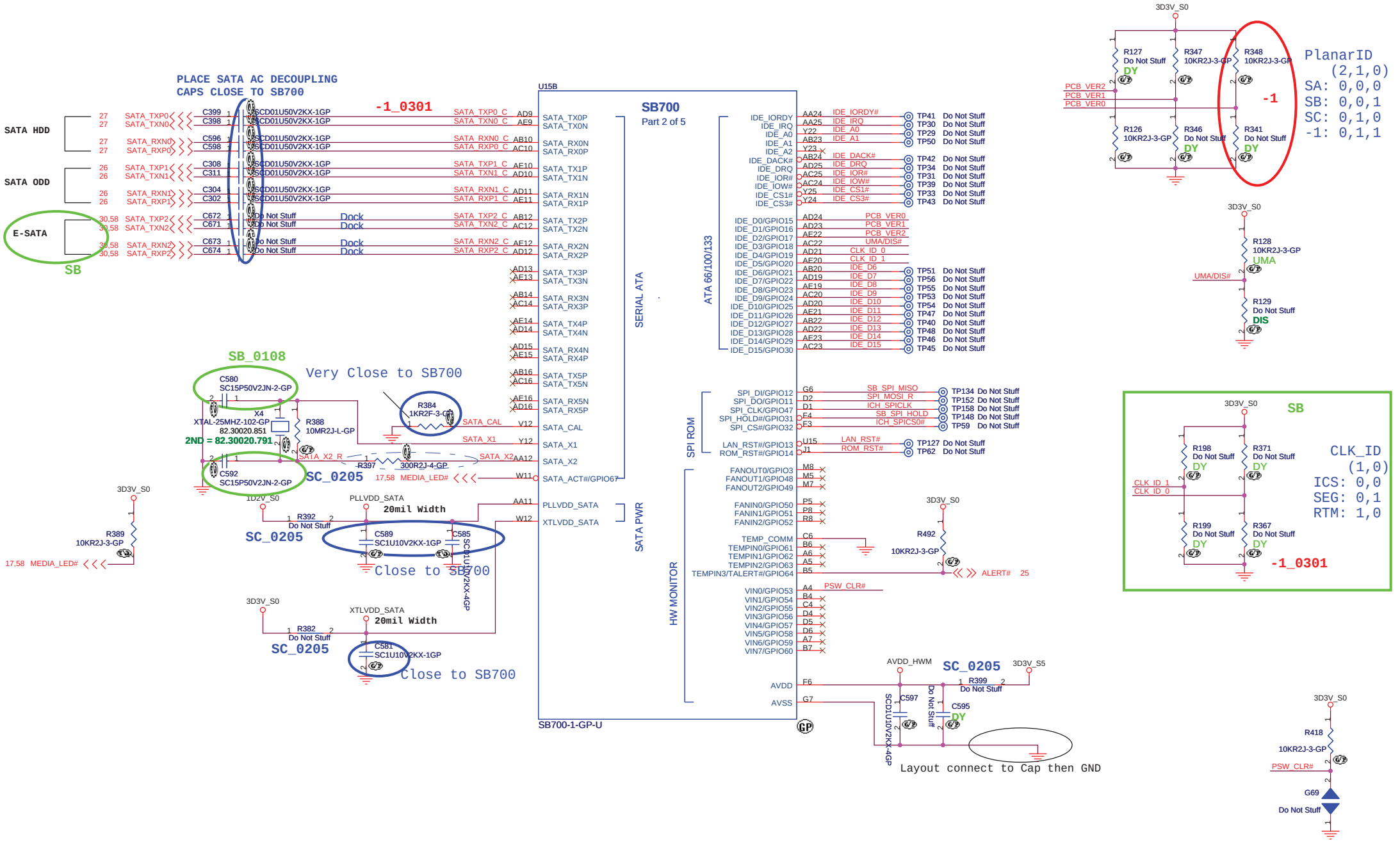
PLACE SATA AC DECOUPLING CAPS CLOSE TO SB700
-1_0301
SATA HDD
SATA ODD
E-SATA
SB
SB700
Part 2 of 5
U15B
SB700-1-GP-U
SERIAL ATA
ATA 66/100/133
SPI ROM
SATA PWR
HW MONITOR
SB_0108
Very Close to SB700
SC_0205
2ND = 82.30020.791
20mil Width
Close to SB700
Layout connect to Cap then GND
PlanarID
(2,1,0)
SA: 0,0,0
SB: 0,0,1
SC: 0,1,0
-1: 0,1,1
CLK_ID
(1,0)
ICS: 0,0
SEG: 0,1
RTM: 1,0
UMA NODOCK
Wistron Corporation
21F, 88, Sec.1, Hsin Tai Wu Rd., Hsichih, Taipei Hsien 221, Taiwan, R.O.C.
Title
ATi-SB700_SATA-IDE_(3/5)
Size A3
Document Number Olan
Rev -1
Date: Monday, April 21, 2008
Sheet 22 of 58

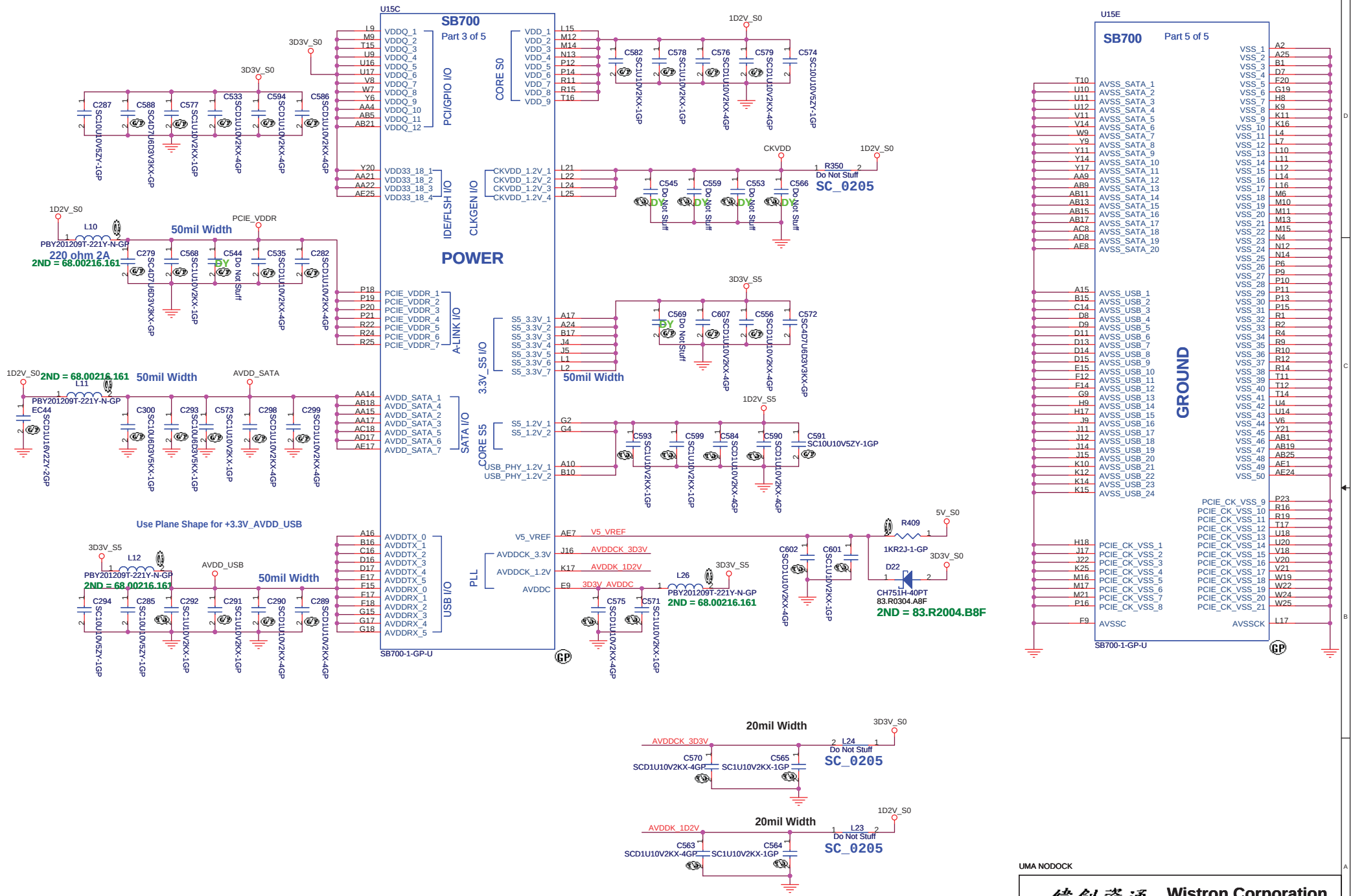

UMA NODOCK

Wistron Corporation
21F, 88, Sec.1, Hsin Tai Wu Rd., Hsichih,
Taipei Hsien 221, Taiwan, R.O.C.

Title: ATi-SB700_POWER&GND_(4/5)

Size: A3 | Document Number: Olan | Rev: -1

Date: Monday, April 21, 2008 | Sheet 23 of 58

REQUIRED STRAPS

REQUIRED SYSTEM STRAPS

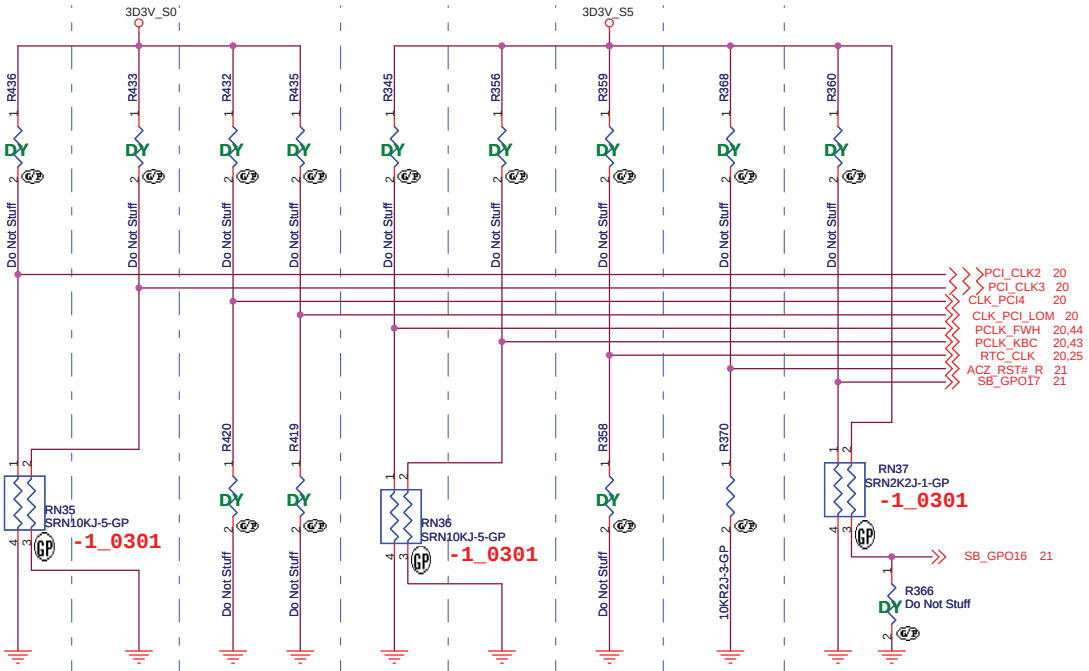

DEBUG STRAPS

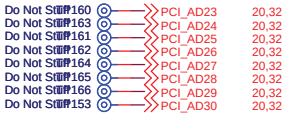

	PCI_CLK2	PCI_CLK3	CLK_PCI_LOM CLK_PCI4	PCLK_FWH	PCLK_KBC	RTCCLK	AZ_RST#	SB_GPO17 , SB_GPO16
PULL HIGH	WatchDOG (NB_PWRGD) ENABLED	USE DEBUG STRAPS	RESERVED	IMC ENABLED	CLKGEN ENABLED (Use Internal)	INTERNAL RTC DEFAULT	ENABLE PCI ROM BOOT	ROM TYPE: H, H = Reserved H, L = SPI ROM DEFAULT
PULL LOW	WatchDog (NB_PWRGD) DISABLED DEFAULT	IGNORE DEBUG STRAPS DEFAULT		IMC DISABLED DEFAULT	CLKGEN DISABLED (Use External) DEFAULT	EXT. RTC (PD on X1, apply 32KHz to RTC_CLK)	DISABLE PCI ROM BOOT DEFAULT	L, H = LPC ROM L, L = FWH ROM

NOTE: SB700 HAS INTERNAL 15K PULL UP RESISTOR FOR RTCCLK

	PCI_AD28	PCI_AD27	PCI_AD26	PCI_AD25	PCI_AD24	PCI_AD23	PCI_AD30 PCI_AD29
PULL HIGH	USE LONG RESET (DEFAULT)	USE PCI PLL (DEFAULT)	USE ACPI BCLK (DEFAULT)	USE IDE PLL (DEFAULT)	USE DEFAULT PCIE STRAPS (DEFAULT)	Reserved (DEFAULT)	Reserved
PULL LOW	USE SHORT RESET	BYPASS PCI PLL	BYPASS ACPI BCLK	BYPASS IDE PLL	USE EEPROM PCIE STRAPS	Reserved	

Note: SB700 has 15K internal PU FOR PCI_AD[30:23]

UMA NODOCK

緯創資通 Wistron Corporation
21F, 88, Sec.1, Hsin Tai Wu Rd., Hsichih,
Taipei Hsien 221, Taiwan, R.O.C.

Title: ATi-SB700_STRAPPING_(5/5)

Size: A3 | Document Number: Olan | Rev: -1

Date: Friday, April 18, 2008 | Sheet 24 of 58

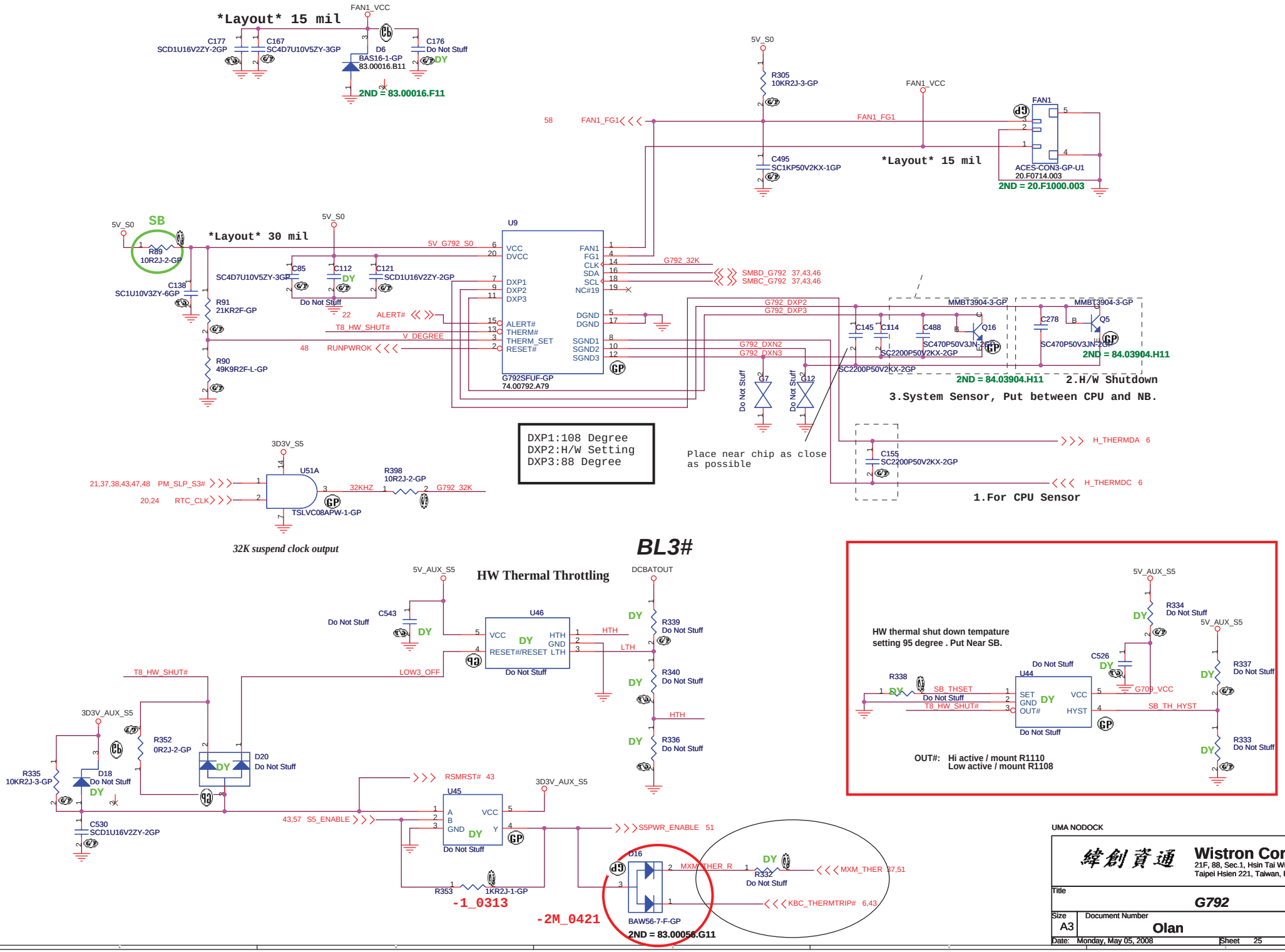

UMA NODOCK

緯創資通 **Wistron Corporation**
21F, 88, Sec.1, Hsin Tai Wu Rd., Hsichih,
Taipei Hsien 221, Taiwan, R.O.C.

Title: **G792**

Size: A3 | Document Number: **Olan** | Rev: -2M

Date: Monday, May 05, 2008 | Sheet 25 of 58

ODD Connector

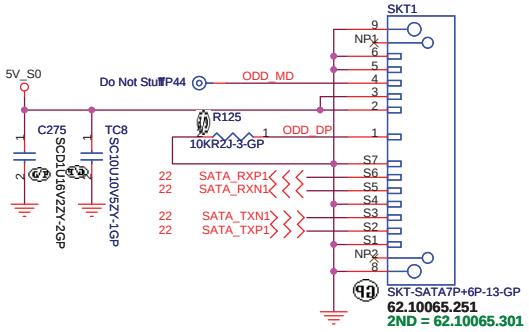

-1_0305

UMA NODOCK

緯創資通 Wistron Corporation
21F, 88, Sec.1, Hsin Tai Wu Rd., Hsichih,
Taipei Hsien 221, Taiwan, R.O.C.

Title		
CDROM		
Size	Document Number	Rev
	Olan	-1

Date: Friday, April 18, 2008 Sheet 26 of 58

SATA HDD Connector

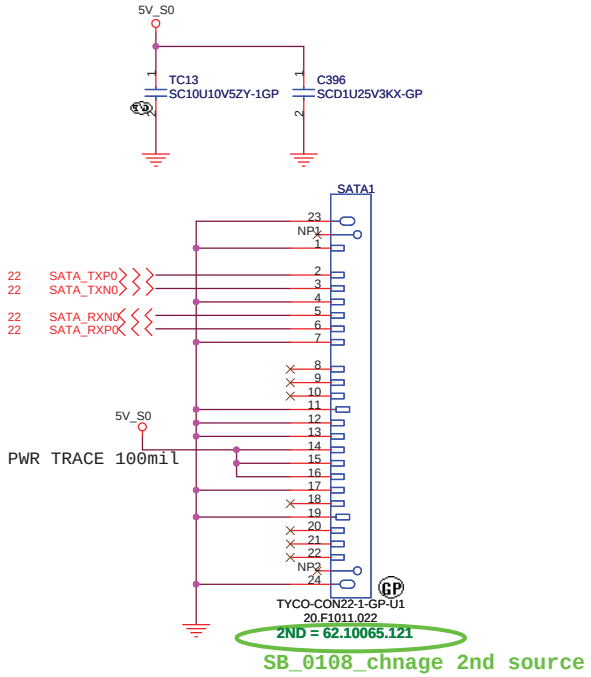

UMA NODOCK

緯創資通 **Wistron Corporation**
21F, 88, Sec.1, Hsin Tai Wu Rd., Hsichih,
Taipei Hsien 221, Taiwan, R.O.C.

Title	***HDD***	
Size	Document Number **Olan**	Rev -1
Date: Friday, April 18, 2008	Sheet 27 of 58	

BLUETOOTH MODULE

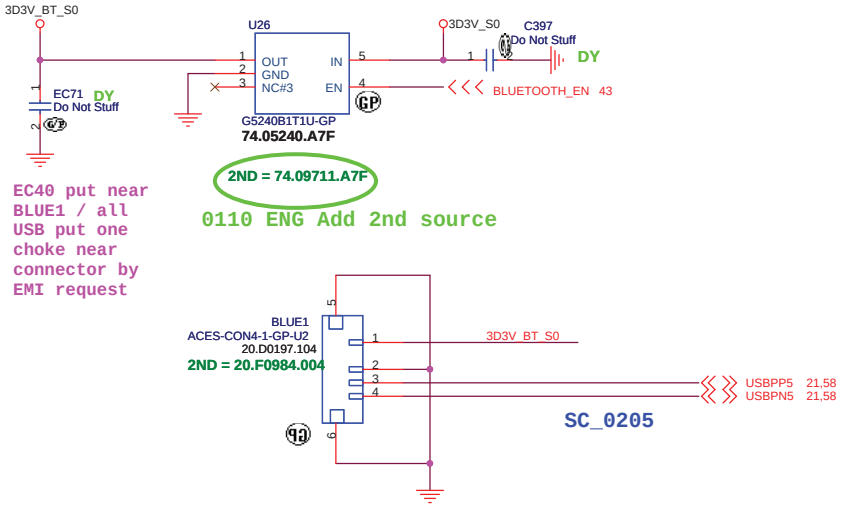

UMA NODOCK

緯創資通 **Wistron Corporation**
21F, 88, Sec.1, Hsin Tai Wu Rd., Hsichih,
Taipei Hsien 221, Taiwan, R.O.C.

Title		
	BLUETOOTH	
Size	Document Number	Rev
	Olan	-1
Date: Friday, April 18, 2008	Sheet 28 of 58	

MDC 1.5 CONN

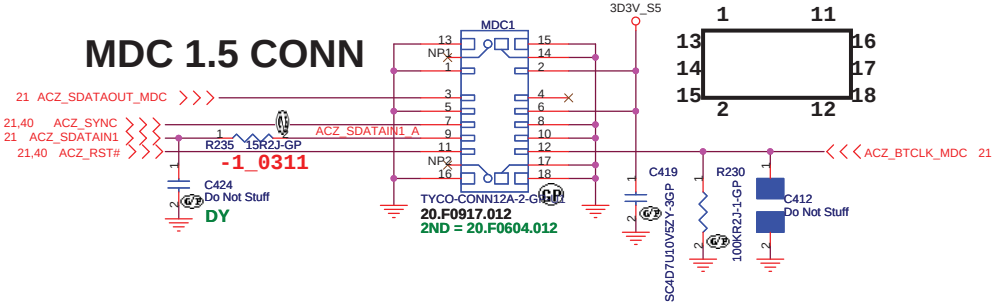

UMA NODOCK

緯創資通 Wistron Corporation
21F, 88, Sec.1, Hsin Tai Wu Rd., Hsichih,
Taipei Hsien 221, Taiwan, R.O.C.

Title	MDC	
Size	Document Number: Olan	Rev: -1
Date: Friday, April 18, 2008	Sheet 29 of 58	

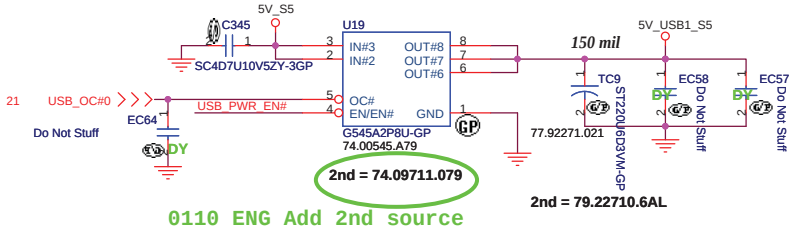

0110 ENG Add 2nd source

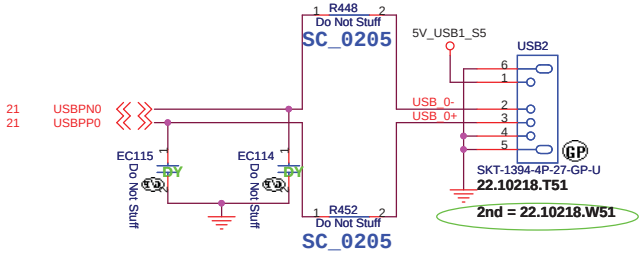

SB_0108_change 2nd source

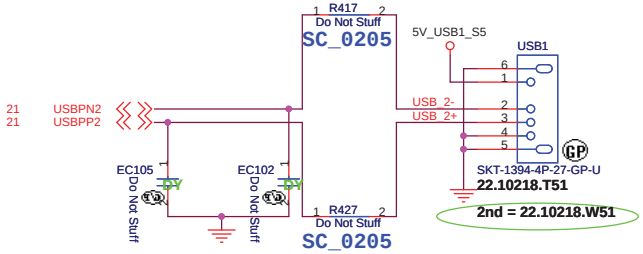

SB_0102

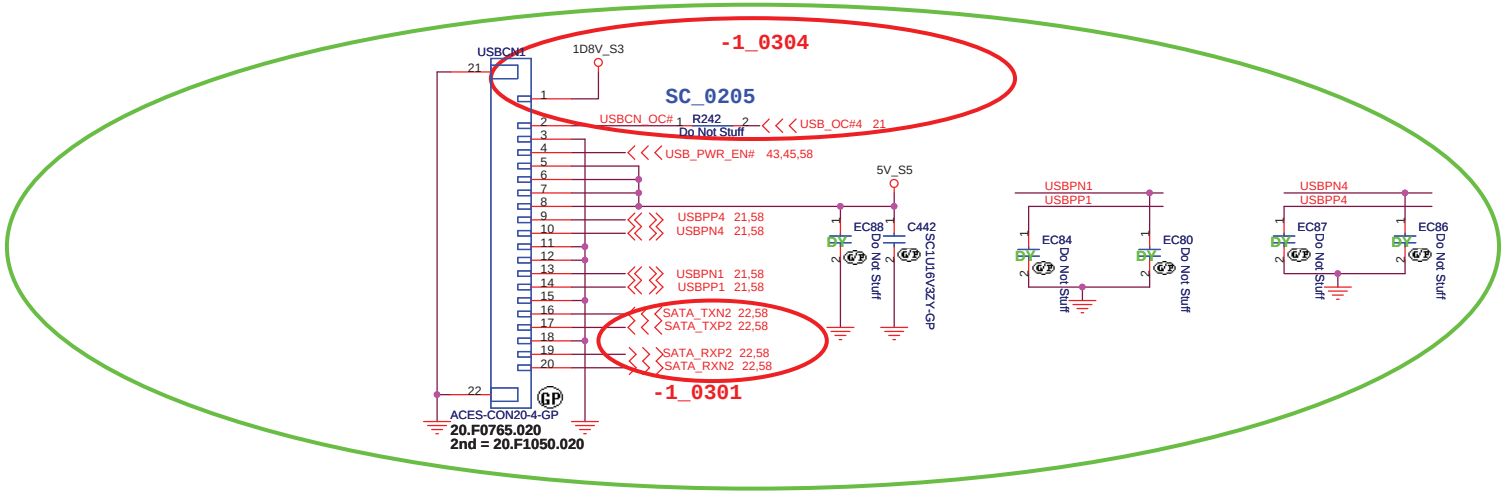

58 USBCN_OC# USBCN_OC#

UMA NODOCK

緯創資通	**Wistron Corporation** 21F, 88, Sec.1, Hsin Tai Wu Rd., Hsichih, Taipei Hsien 221, Taiwan, R.O.C.
Title	***USB***
Size / Document Number	**Olan**
Rev	-2M
Date: Monday, May 05, 2008	Sheet 30 of 58

Finger printer

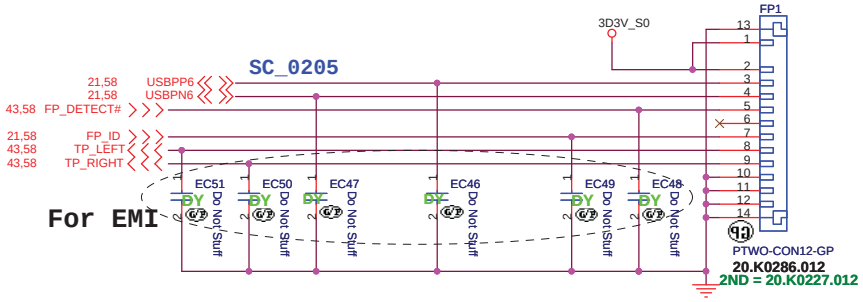

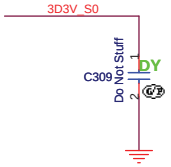

UMA NODOCK

緯創資通	**Wistron Corporation** 21F, 88, Sec.1, Hsin Tai Wu Rd., Hsichih, Taipei Hsien 221, Taiwan, R.O.C.	
Title	***Finger Printer***	
Size	Document Number **Olan**	Rev -1
Date: Friday, April 18, 2008	Sheet 31 of 58	

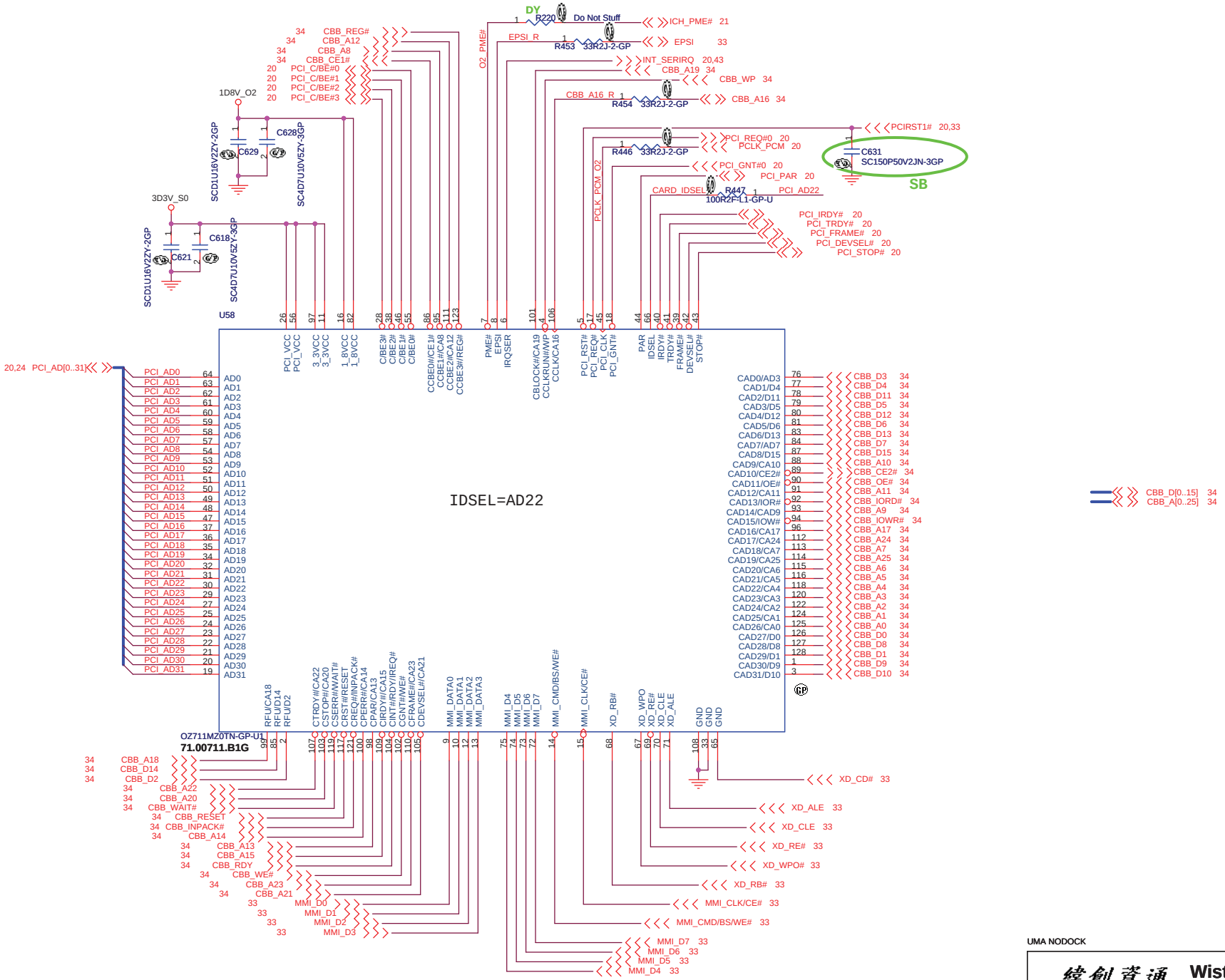

UMA NODOCK

Wistron Corporation
21F, 88, Sec.1, Hsin Tai Wu Rd., Hsichih,
Taipei Hsien 221, Taiwan, R.O.C.

Title: *OZ711MZ0*

Size	Document Number	Rev
A3	Olan	-1

Date: Monday, April 21, 2008 Sheet 32 of 58

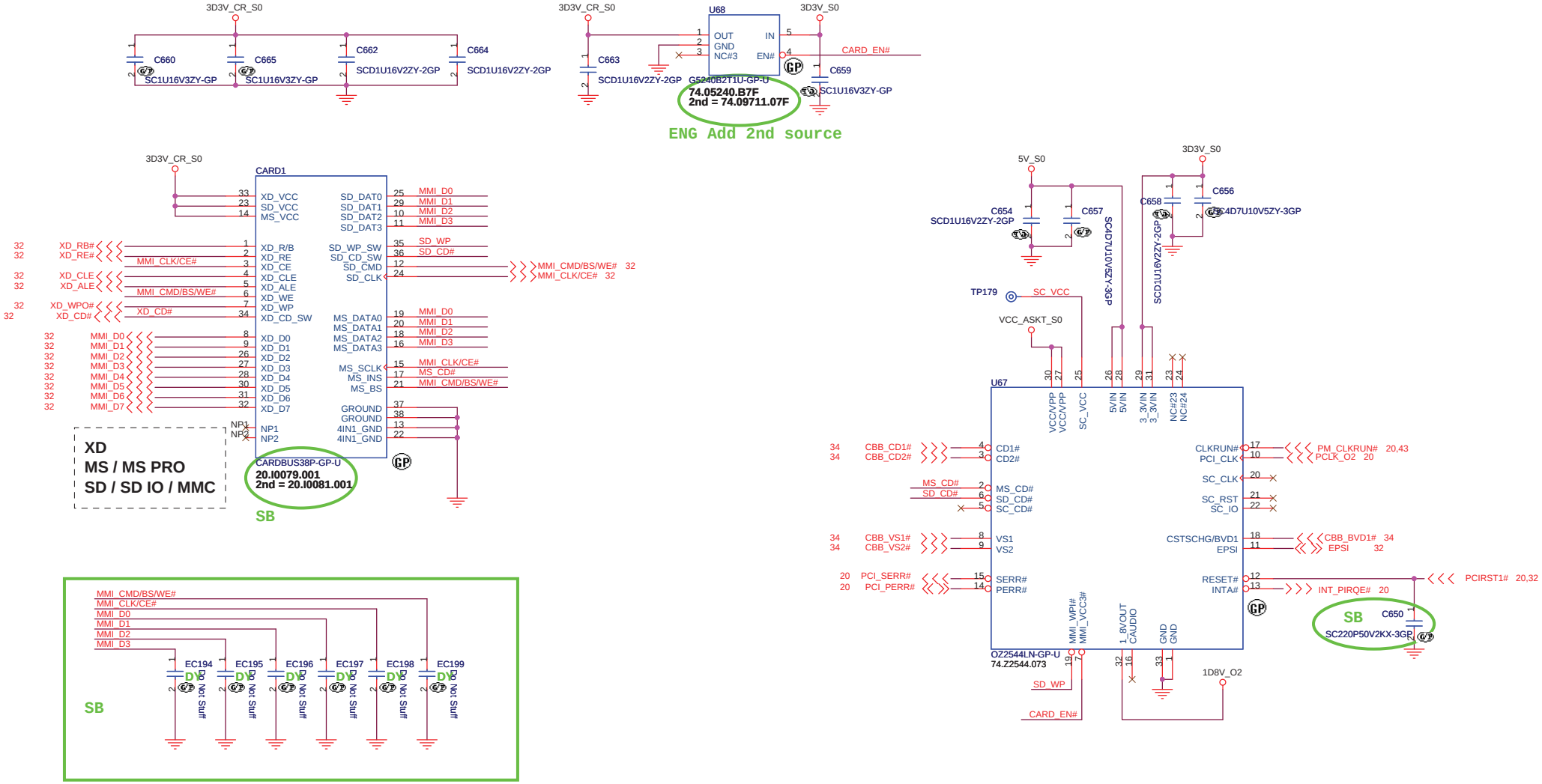

UMA NODOCK

Wistron Corporation
21F, 88, Sec.1, Hsin Tai Wu Rd., Hsichih,
Taipei Hsien 221, Taiwan, R.O.C.

Title: *Card Reader Connector*

Size	Document Number	Rev
A3	Olan	-1

Date: Friday, April 18, 2008 Sheet 33 of 58

PCMCIA Socket

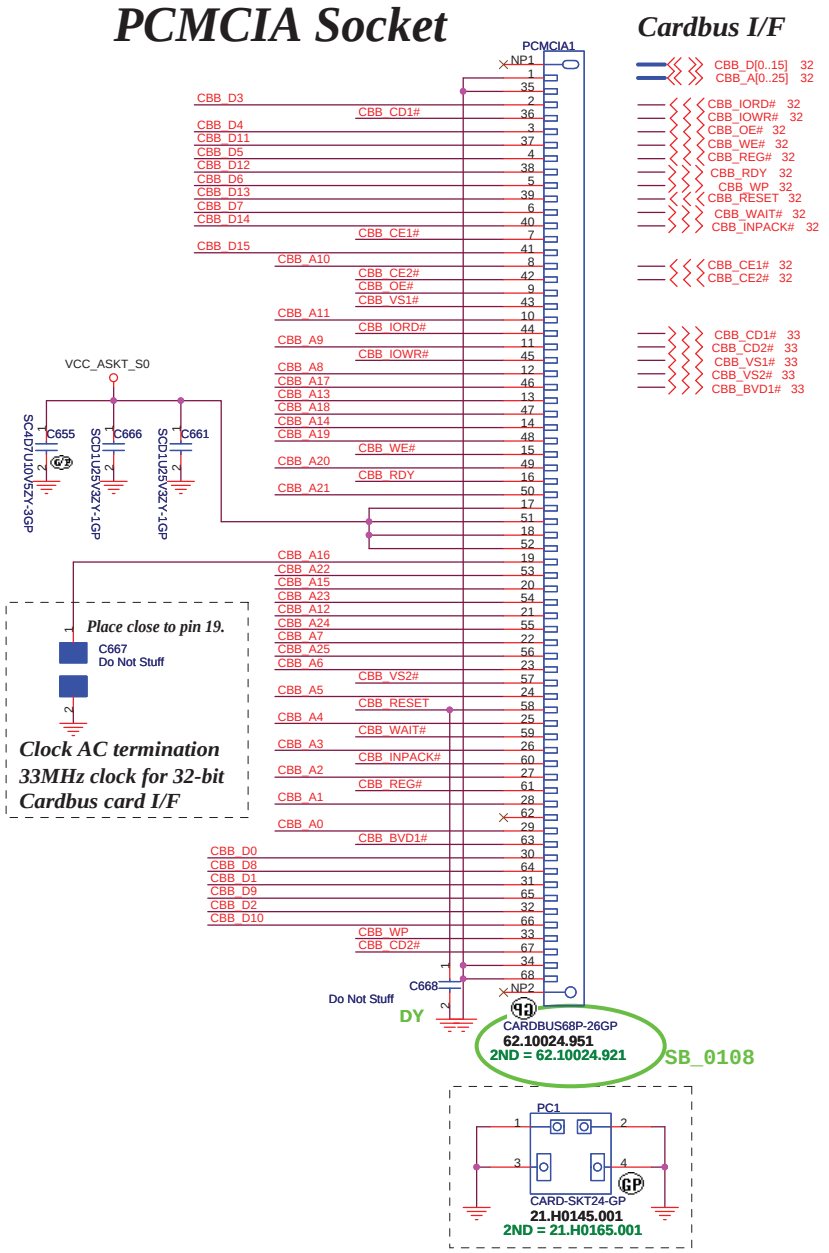

Cardbus I/F

UMA NODOCK

緯創資通 Wistron Corporation
21F, 88, Sec.1, Hsin Tai Wu Rd., Hsichih,
Taipei Hsien 221, Taiwan, R.O.C.

Title	PCMCIA	
Size A3	Document Number Olan	Rev -1
Date: Monday, April 21, 2008	Sheet 34 of 58	

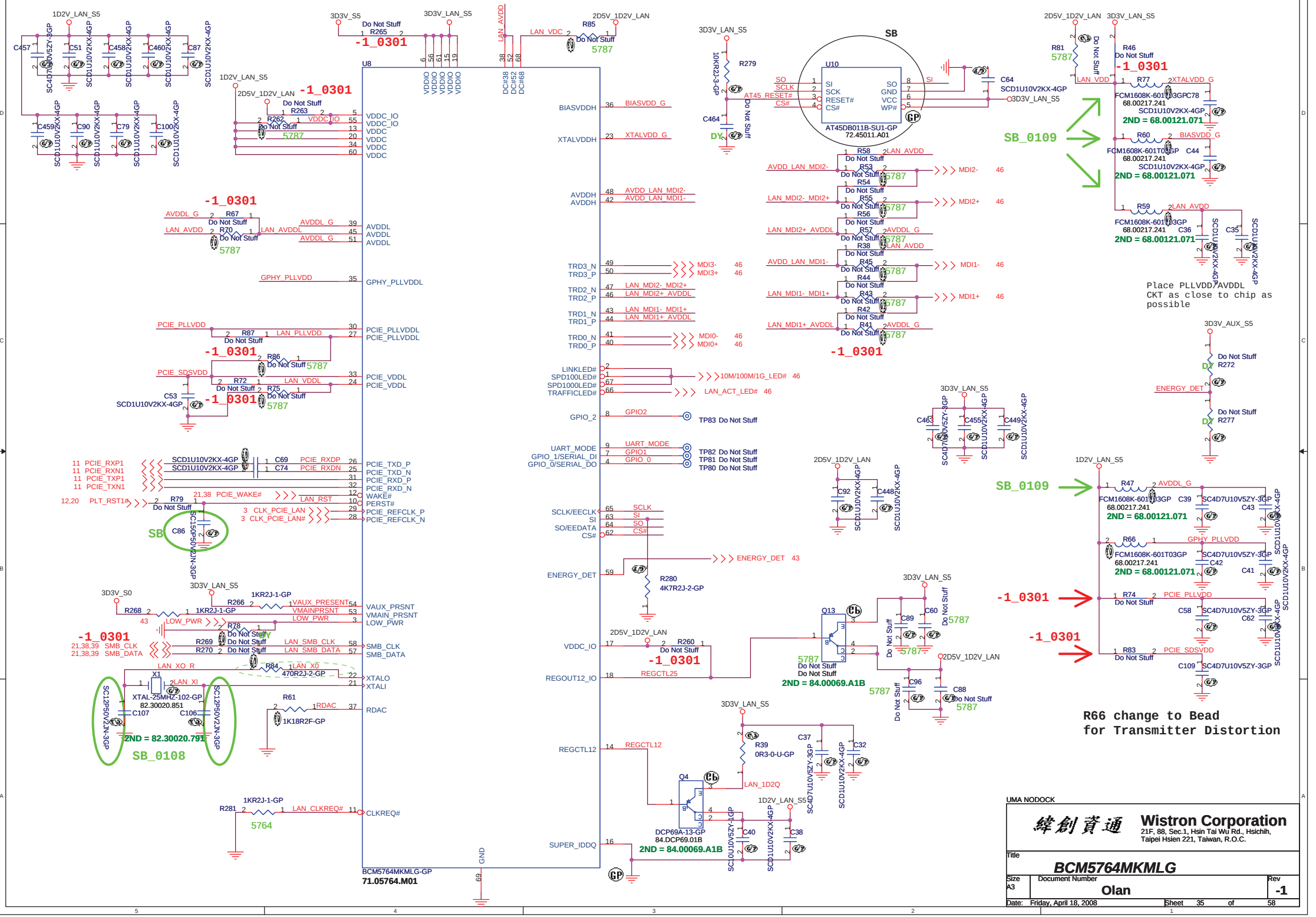
U8
BCM5764MKMLG-GP
71.05764.M01
SB
U10
AT45DB011B-SU1-GP
72.45011.A01
SB_0109
SB_0108
-1_0301
Place PLLVDD/AVDDL CKT as close to chip as possible
R66 change to Bead for Transmitter Distortion
UMA NODOCK
緯創資通
Wistron Corporation
21F, 88, Sec.1, Hsin Tai Wu Rd., Hsichih, Taipei Hsien 221, Taiwan, R.O.C.
Title
BCM5764MKMLG
Size A3
Document Number
Olan
Rev -1
Date: Friday, April 18, 2008
Sheet 35 of 58

LAN Connector

1.route on bottom as differential pairs.
2.Tx+/Tx- are pairs. Rx+/Rx- are pairs.
3.No vias, No 90 degree bends.
4.pairs must be equal lengths.
5.6mil trace width,12mil separation.
6.36mil between pairs and any other trace.
7.Must not cross ground moat,except RJ-45 moat.

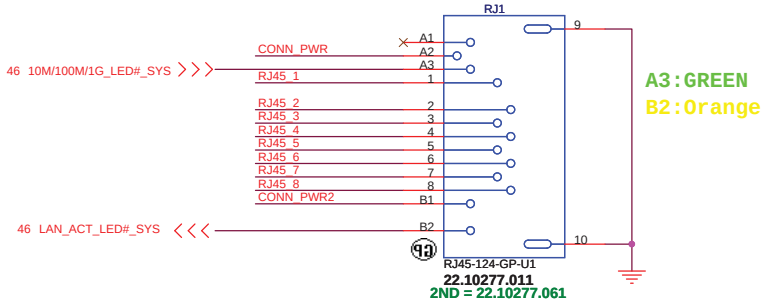

LAN Link: Green(A3), behavior is the same for 10/100/1000 bits

LAN Data: Yellow(B2), when LAN is transfering data.

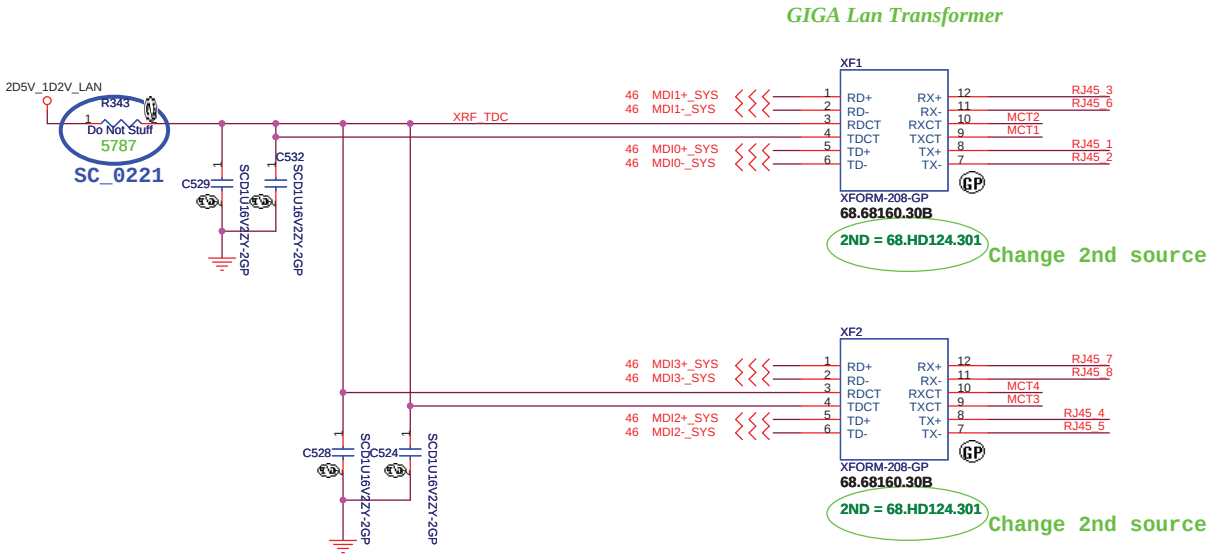

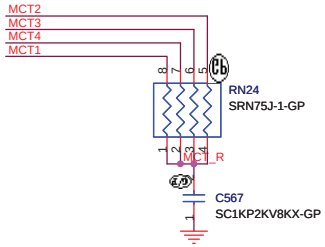

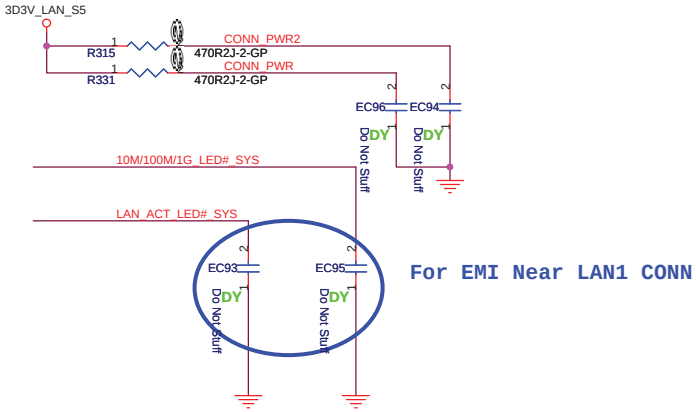

UMA NODOCK

緯創資通 **Wistron Corporation**
21F, 88, Sec.1, Hsin Tai Wu Rd., Hsichih, Taipei Hsien 221, Taiwan, R.O.C.

Title		
LAN CONN		
Size: A3	Document Number: Olan	Rev: -1
Date: Monday, April 21, 2008	Sheet 36 of 58	

NV SMBus
A(pin143&145) : VGA(CRT) / DOCK
B(pin218&220) : DVI
C(pin208&210) : HDMI / TPI / LVDS

Put near graphic connector

11 PEG_TXP[15..0]
11 PEG_TXN[15..0]
11 PEG_RXP[15..0]
11 PEG_RXN[15..0]

48,50,52 VCORE_EN
21,25,38,43,47,48 PM_SLP_S3#
1D8V_S0_MXM
5V_S0
R457 Do Not Stuff
R456 Do Not Stuff
C494 Do Not Stuff
TP85
-1_0301
? CHECK ATI NEED?
C492 Do Not Stuff
C493 Do Not Stuff
MXM_16
MXM_26
DCBATOUT_MXM
C515 Do Not Stuff
C514 Do Not Stuff
C513 Do Not Stuff
C511 Do Not Stuff
C512 Do Not Stuff
MH1
MH2
MXM1 Do Not Stuff
DIS Do Not Stuff

16 G72_TXBOUT0+
16 G72_TXBOUT0-
16 G72_TXBOUT1+
16 G72_TXBOUT1-
16 G72_TXBOUT2+
16 G72_TXBOUT2-
Do Not Stuff TP91
MXM_SPDIF
16 G72_TXBCLK+
16 G72_TXBCLK-
45 CRT_BLUE
45 CRT_GREEN
45 CRT_RED
Do Not Stuff TP90
MXM_ACZ_RST#

G72_TXACLK- 16
G72_TXACLK+ 16
G72_TXAOUT2- 16
G72_TXAOUT2+ 16
G72_TXAOUT1- 16
G72_TXAOUT1+ 16
G72_TXAOUT0- 16
G72_TXAOUT0+ 16
LCD_EDID_DAT 16
LCD_EDID_CLK 16
LCDVDD_ON 16
BLON_IN 43
NV_DVI_DAT 46
NV_DVI_CLK 46
2D5V_S0
R307 Do Not Stuff
3D3V_S0
C491 Do Not Stuff
C497 Do Not Stuff
TP87
TP88
TP86
TP21
TP20
TP89
TP90
TP91
TP99
TP102
TP97
TP98
TP111
TP109
TP94
TP95

3 CLK_PCIE_PEG#
3 CLK_PCIE_PEG

SC_0205
20,38,39,43,44 PLT_RST1#_B
R324 Do Not Stuff
PLT_RST1#_MXM
Do Not Stuff
C510
SB
Do Not Stuff TP102
Do Not Stuff TP99
MXM_ACZ_SYNC
MXM_ACZ_BITCLK
25,43,46 SMBD_G792
25,43,46 SMBC_G792
SC_0205
25,51 MXM_THER
18 CRT_HSYNC
18 CRT_VSYNC
16,18 CRT_DDCCLK
16,18 CRT_DDCDATA
Do Not Stuff TP97
Do Not Stuff TP98
MXM_ACZ_SDIN2
MXM_ACZ_SDATAOUT

AC/DC_DET
R618 Do Not Stuff
3D3V_S0
SB
SB_remove TP

Do Not Stuff TP111
Do Not Stuff TP109
NV_HDMI_DAT
NV_HDMI_CLK
Do Not Stuff TP94
Do Not Stuff TP95
TMDS_GPIO6_SW
MXM_171

TMDS_A_TX0+ 46
TMDS_A_TX0- 46
TMDS_A_TX1+ 46
TMDS_A_TX1- 46
TMDS_A_TX2+ 46
TMDS_A_TX2- 46
TMDS_A_TXC+ 46
TMDS_A_TXC- 46
MXM_DVI_HPD 46

DCBATOUT
DCBATOUT_MXM
G24 Do Not Stuff
G22 Do Not Stuff
G23 Do Not Stuff
G25 Do Not Stuff
G105 Do Not Stuff
G106 Do Not Stuff

UMA NODOCK

緯創資通 Wistron Corporation
21F, 88, Sec.1, Hsin Tai Wu Rd., Hsichih,
Taipei Hsien 221, Taiwan, R.O.C.

Title: Graphic MXM CONN
Size: A3
Document Number: Olan
Rev: -1
Date: Friday, April 18, 2008
Sheet 37 of 58

NEWCARD Connector

Reserve the symbol
for bottom side
connector

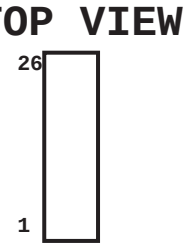

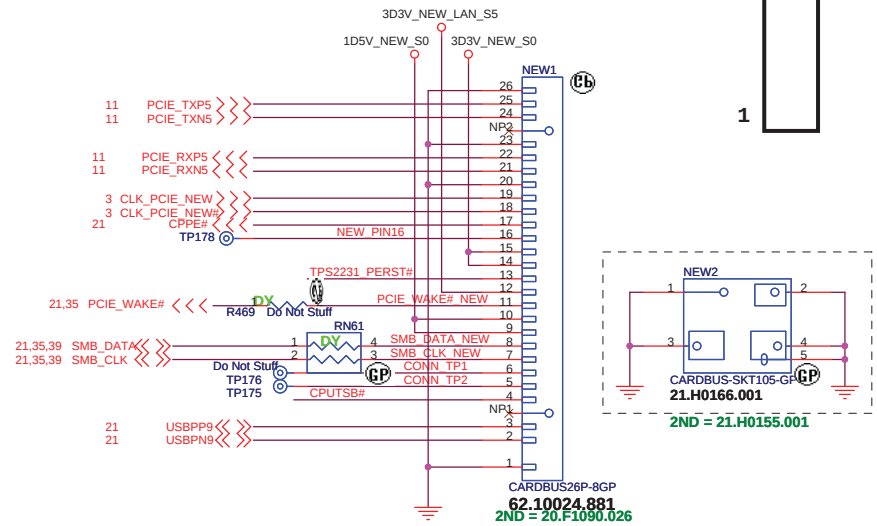

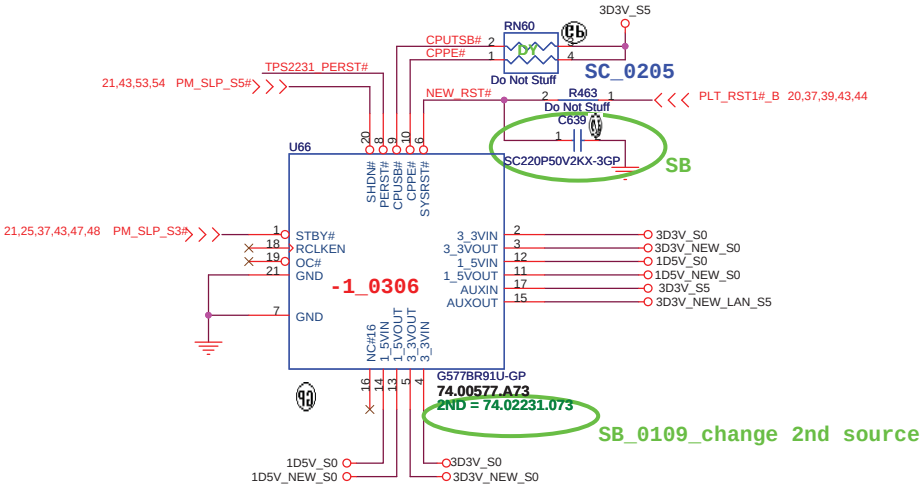

Place them Near to ChipPlace them Near to Connector

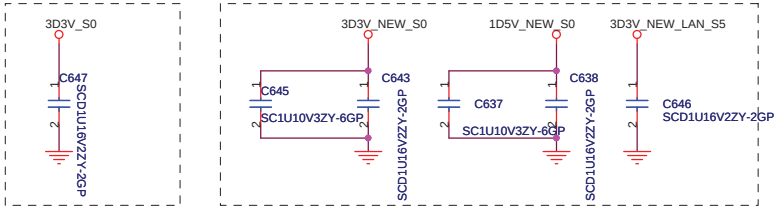

UMA NODOCK

緯創資通 Wistron Corporation
21F, 88, Sec.1, Hsin Tai Wu Rd., Hsichih,
Taipei Hsien 221, Taiwan, R.O.C.

Title		
NEW CARD		
Size: A3	Document Number: Olan	Rev: -1
Date: Friday, April 18, 2008	Sheet 38 of 58	

Mini Card Connector(WLAN)

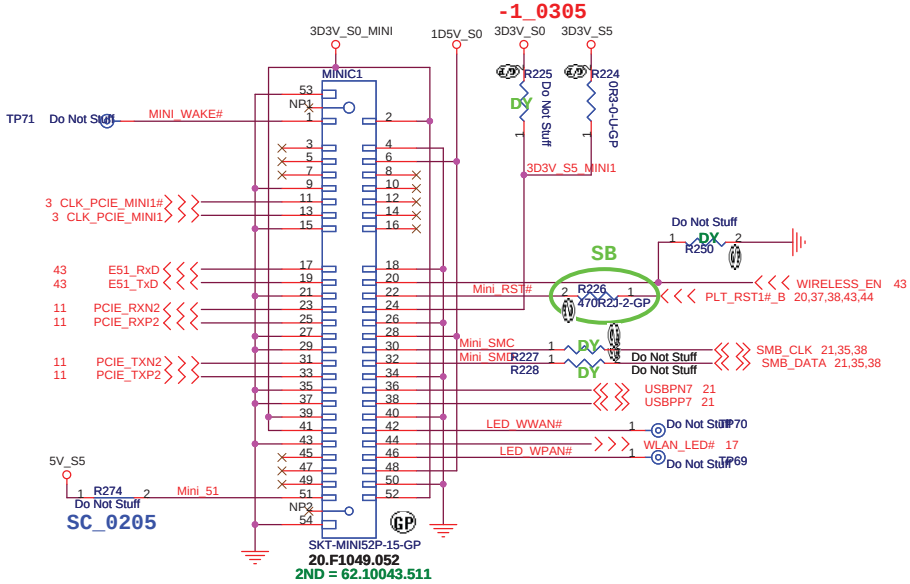

Place near MINIC1

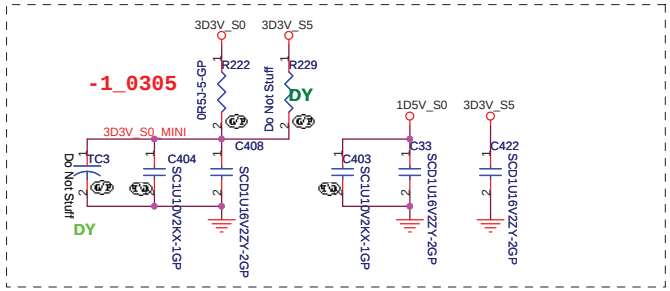

UMA NODOCK

緯創資通 **Wistron Corporation**
21F, 88, Sec.1, Hsin Tai Wu Rd., Hsichih,
Taipei Hsien 221, Taiwan, R.O.C.

Title		
	Mini Card	
Size A3	Document Number Olan	Rev -1
Date: Friday, April 18, 2008	Sheet 39 of 58	

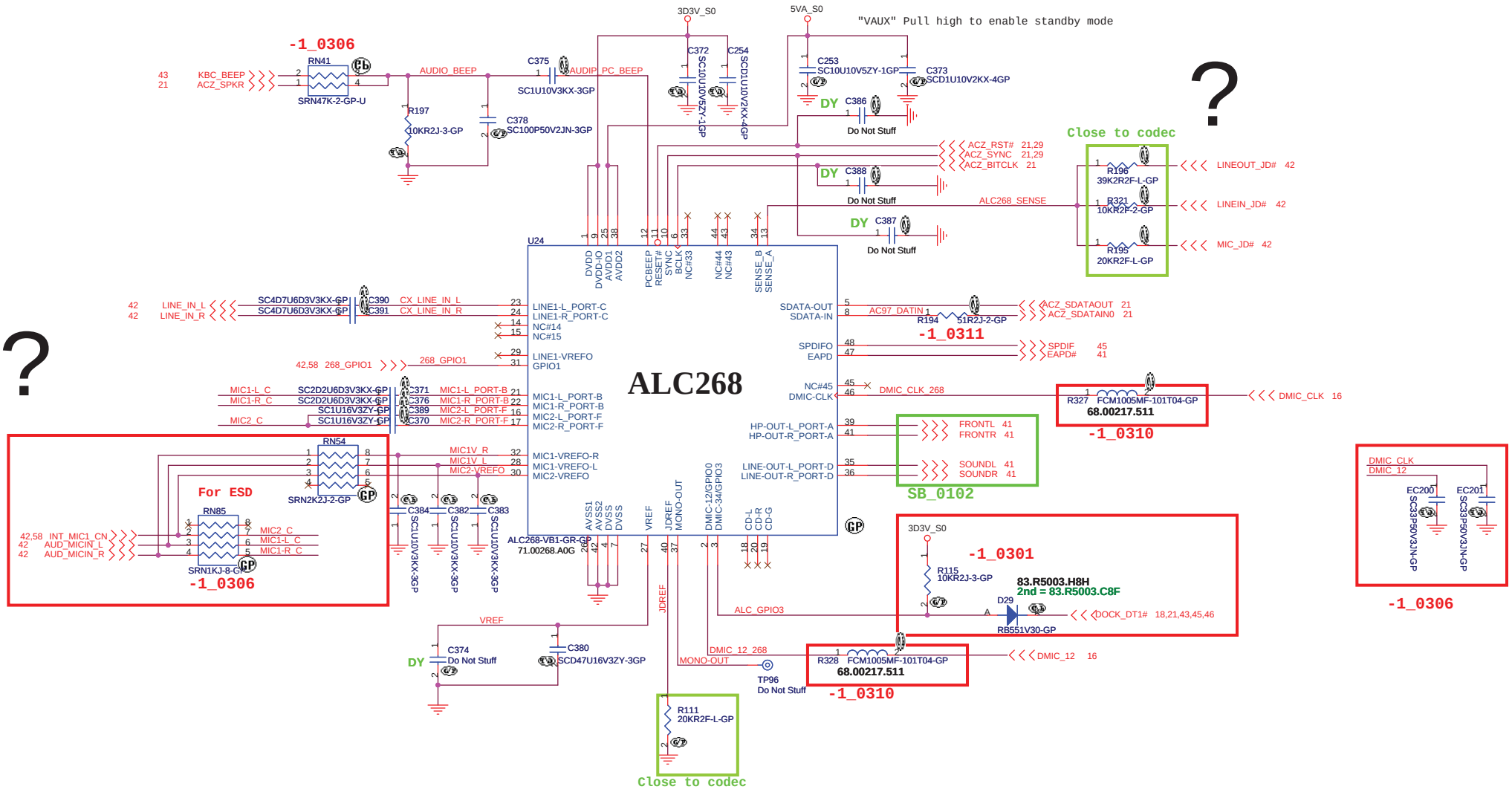

-1_0304

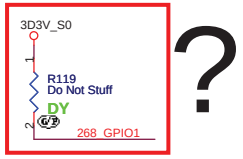

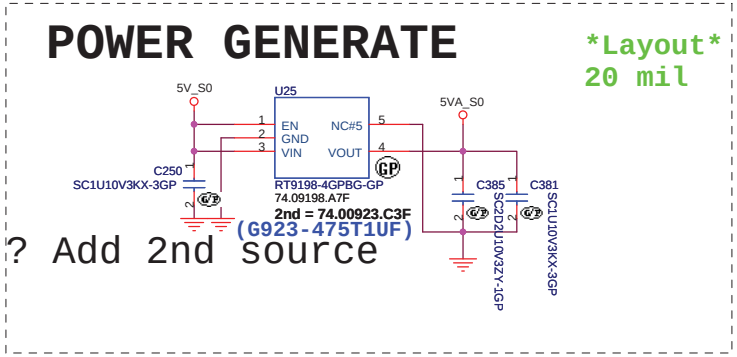

UMA NODOCK

緯創資通	Wistron Corporation 21F, 88, Sec.1, Hsin Tai Wu Rd., Hsichih, Taipei Hsien 221, Taiwan, R.O.C.
Title	Azalia codec ALC268
Size A3	Document Number Olan
Rev	-2M
Date: Monday, May 05, 2008	Sheet 40 of 58

AUDIO OP AMPLIFIER

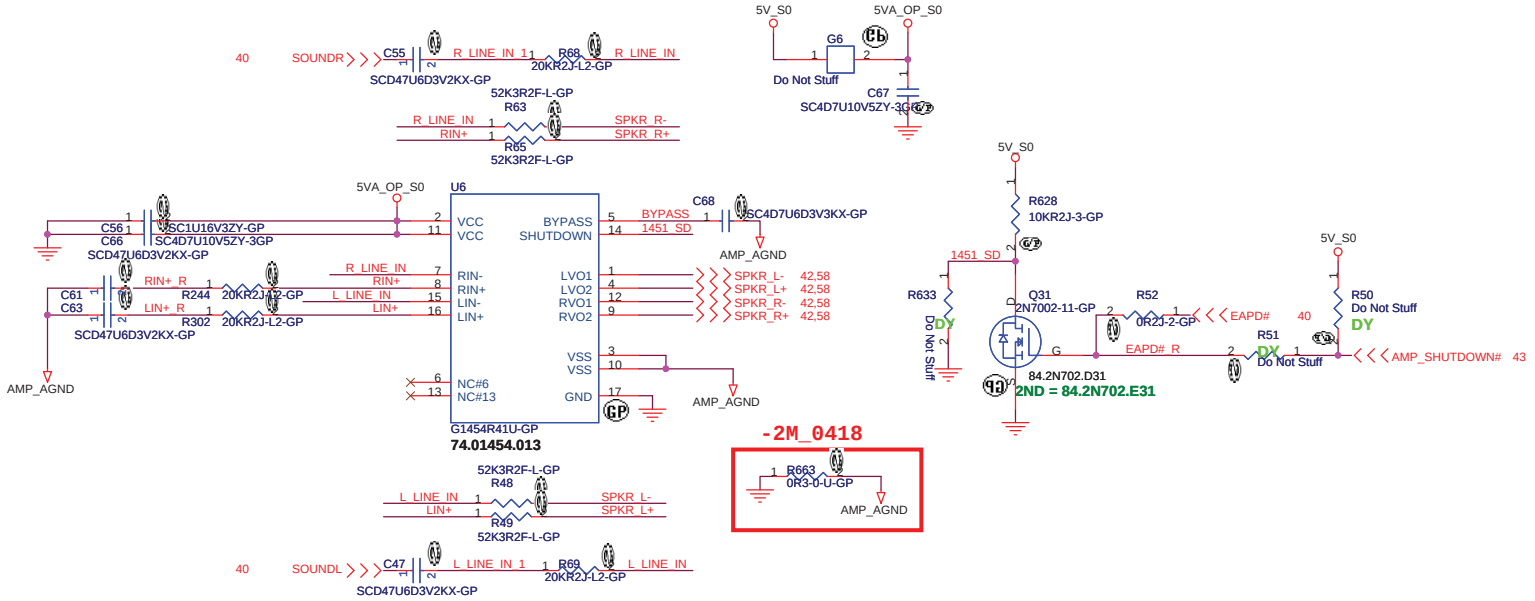

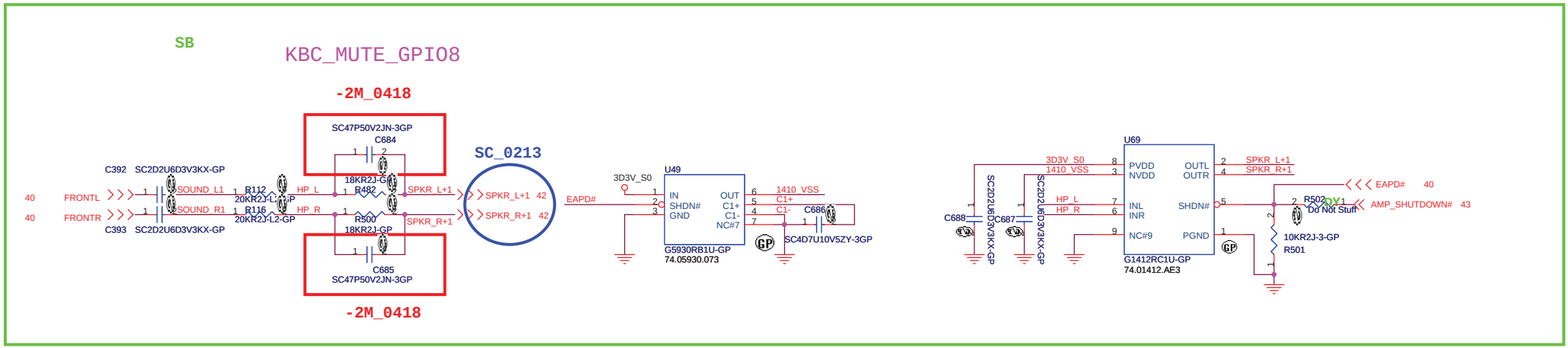

UMA NODOCK

緯創資通 **Wistron Corporation**
21F, 88, Sec.1, Hsin Tai Wu Rd., Hsichih,
Taipei Hsien 221, Taiwan, R.O.C.

Title	AUDIO AMP	
Size A3	Document Number Olan	Rev -2M
Date: Monday, May 05, 2008	Sheet 41 of 58	

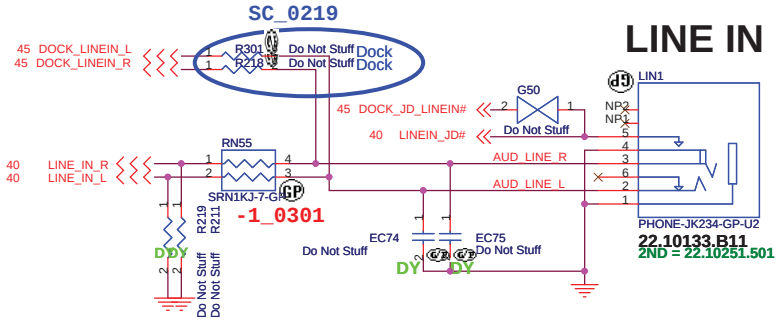

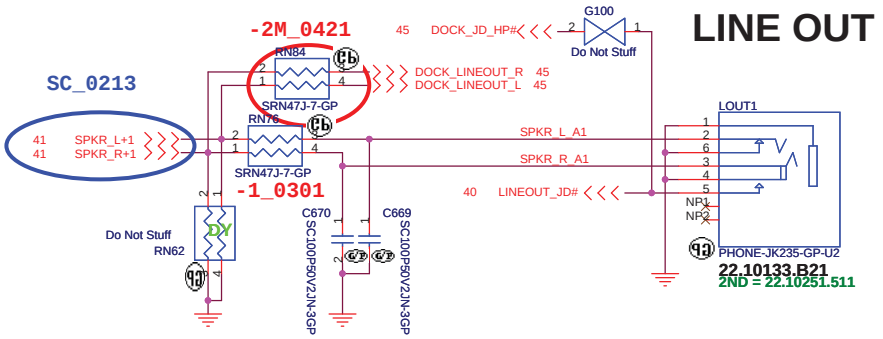

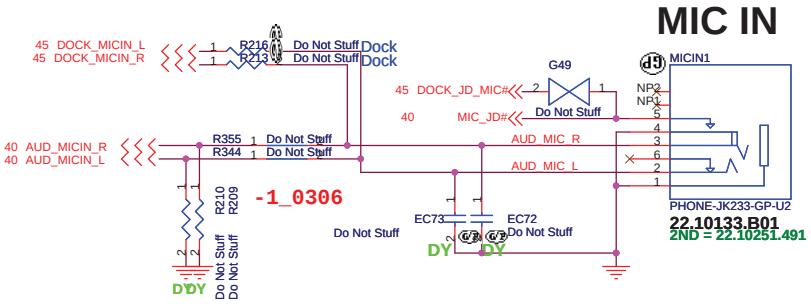

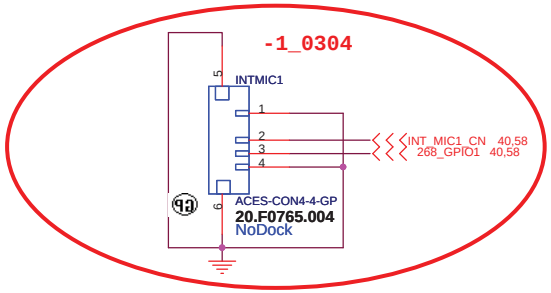

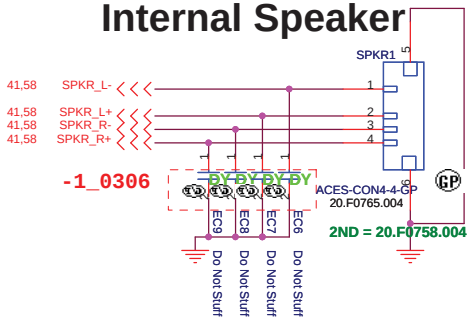

UMA NODOCK

緯創資通	**Wistron Corporation** 21F, 88, Sec.1, Hsin Tai Wu Rd., Hsichih, Taipei Hsien 221, Taiwan, R.O.C.	
Title	*AUDIO JACK*	
Size A3	Document Number Olan	Rev -1
Date: Monday, April 21, 2008	Sheet 42 of 58	

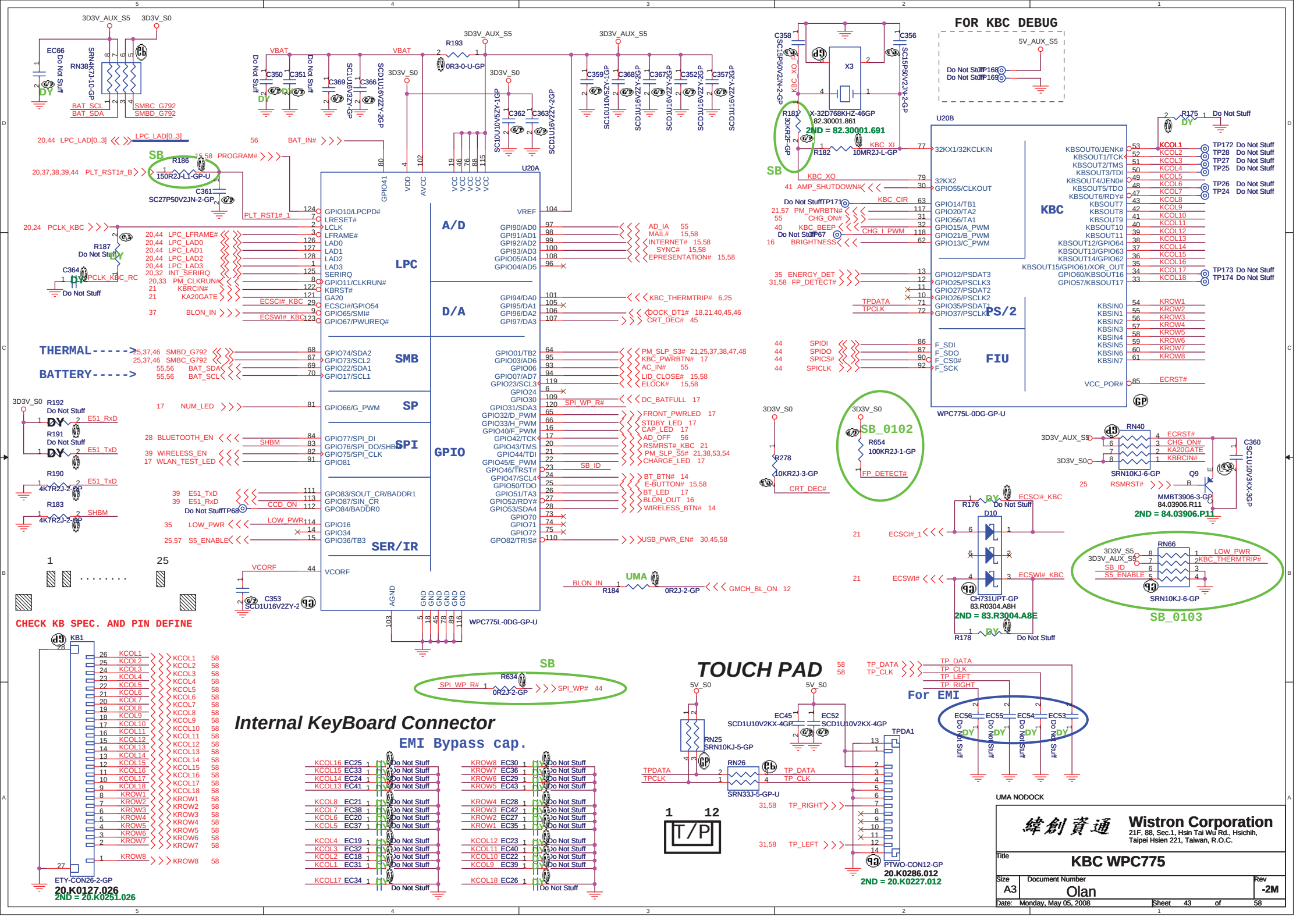
FOR KBC DEBUG
U20A
LPC
A/D
D/A
SMB
SP
SPI
GPIO
SER/IR
WPC775L-0DG-GP-U
U20B
KBC
PS/2
FIU
THERMAL----->
BATTERY----->
CHECK KB SPEC. AND PIN DEFINE
KB1
ETY-CON26-2-GP
20.K0127.026
2ND = 20.K0251.026
Internal KeyBoard Connector
EMI Bypass cap.
TOUCH PAD
For EMI
PTWO-CON12-GP
20.K0286.012
2ND = 20.K0227.012
UMA NODOCK
Wistron Corporation
21F, 88, Sec.1, Hsin Tai Wu Rd., Hsichih,
Taipei Hsien 221, Taiwan, R.O.C.
Title
KBC WPC775
Size
A3
Document Number
Olan
Rev
-2M
Date: Monday, May 05, 2008
Sheet 43 of 58

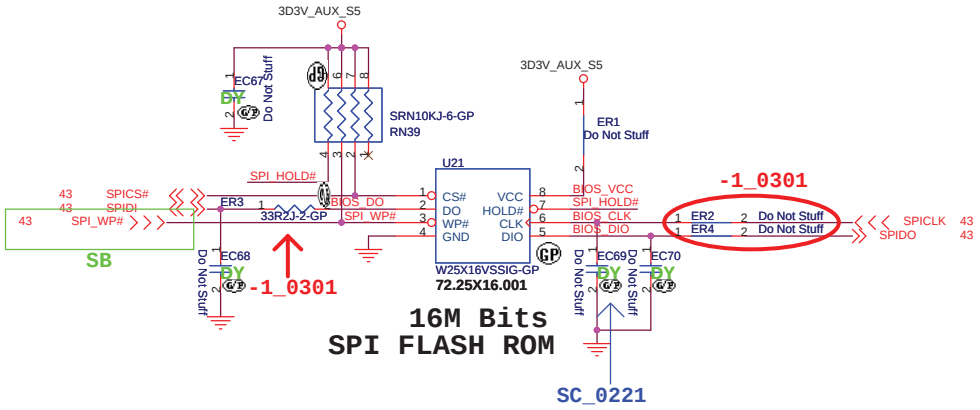

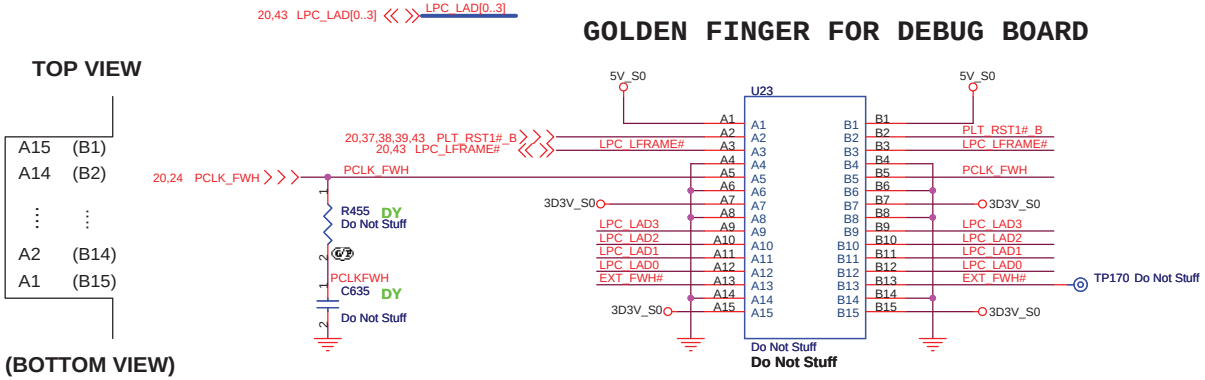

UMA NODOCK

緯創資通 **Wistron Corporation**
21F, 88, Sec.1, Hsin Tai Wu Rd., Hsichih,
Taipei Hsien 221, Taiwan, R.O.C.

Title: ***BIOS***

Size	Document Number	Rev
A3	Olan	-2M

Date: Monday, May 05, 2008 Sheet 44 of 58

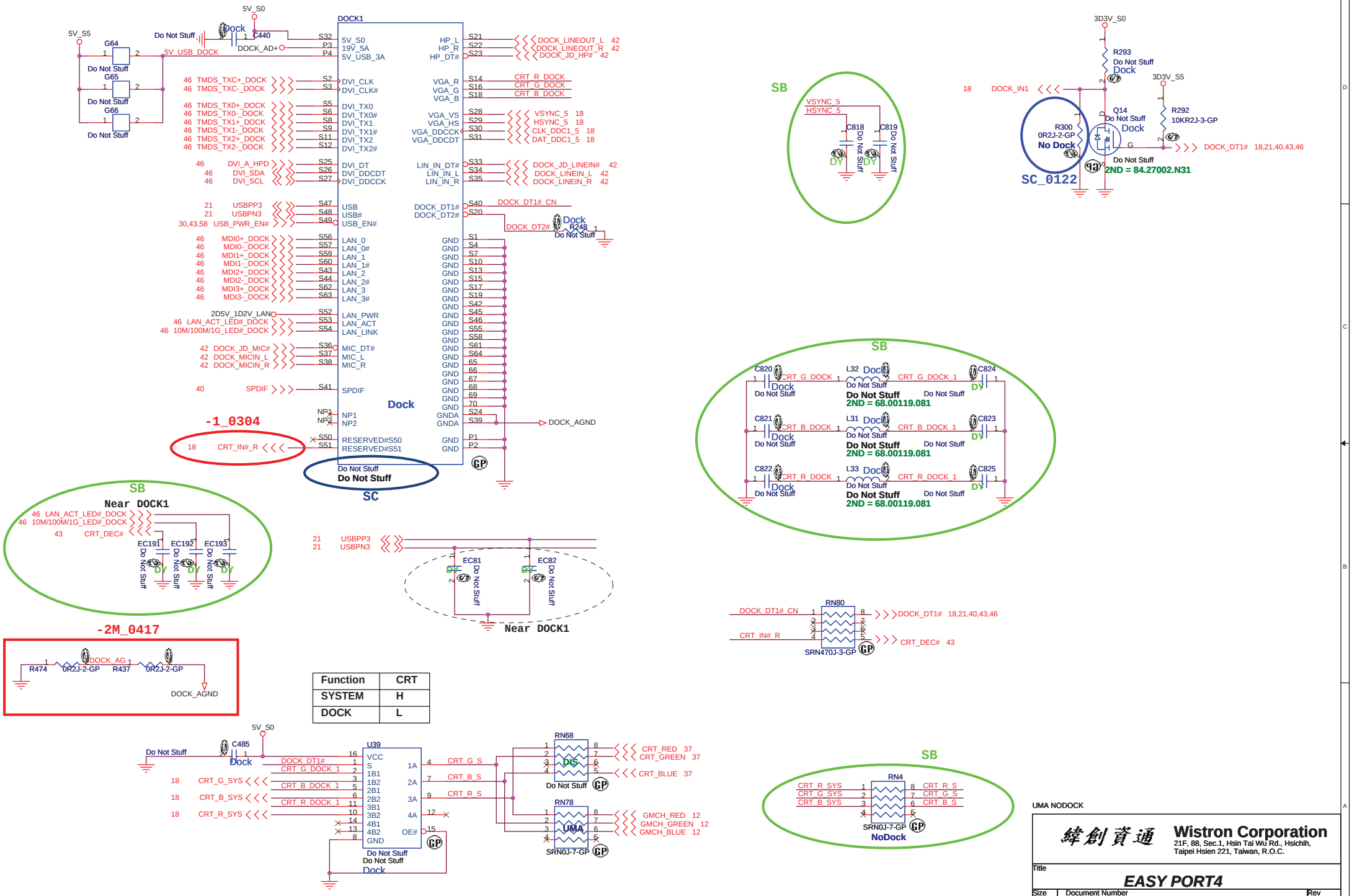

Function	CRT
SYSTEM	H
DOCK	L

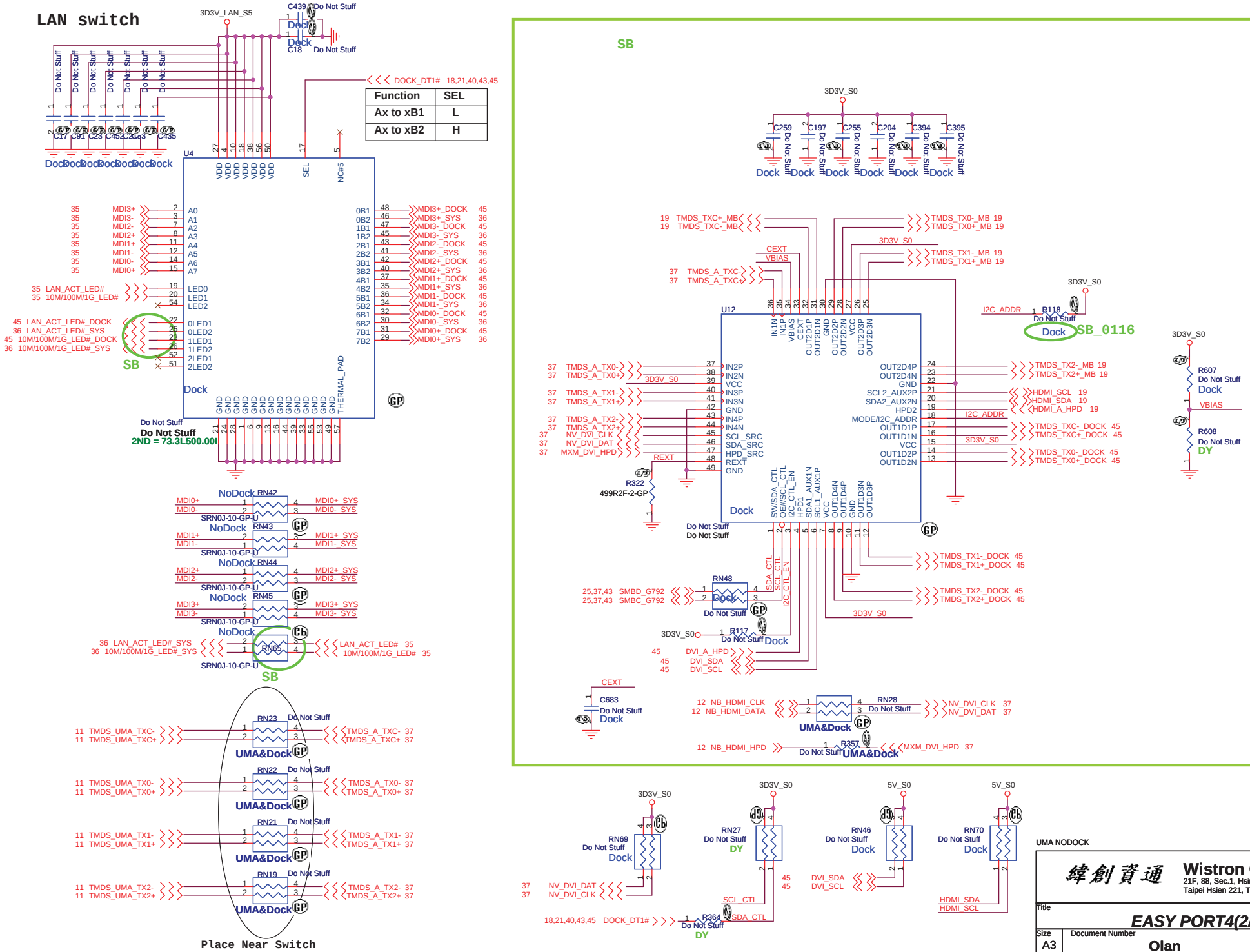
LAN switch
3D3V_LAN_S5
C439 Do Not Stuff
C18 Do Not Stuff
DOCK_DT1# 18,21,40,43,45
Function SEL
Ax to xB1 L
Ax to xB2 H
U4
SB
Dock
Do Not Stuff
2ND = 73.3L500.00
NoDock RN42
NoDock RN43
NoDock RN44
NoDock RN45
NoDock RN65
SRN0J-10-GP-U
SB
RN23 Do Not Stuff
RN22 Do Not Stuff
RN21 Do Not Stuff
RN19 Do Not Stuff
UMA&Dock
Place Near Switch
SB
3D3V_S0
U12
R322
499R2F-2-GP
RN48
R117
R118
SB_0116
R607
R608
DY
C683
RN28
R357
UMA&Dock
RN69
RN27
RN46
RN70
R364
5V_S0
UMA NODOCK
Wistron Corporation
21F, 88, Sec.1, Hsin Tai Wu Rd., Hsichih,
Taipei Hsien 221, Taiwan, R.O.C.
Title
EASY PORT4(2/2)
Size A3
Document Number Olan
Rev -1
Date: Monday, April 21, 2008
Sheet 46 of 58

Aux Power 3D3V_AUX_S5

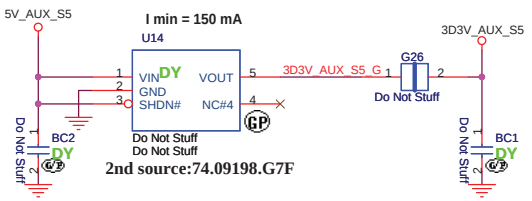

Run Power

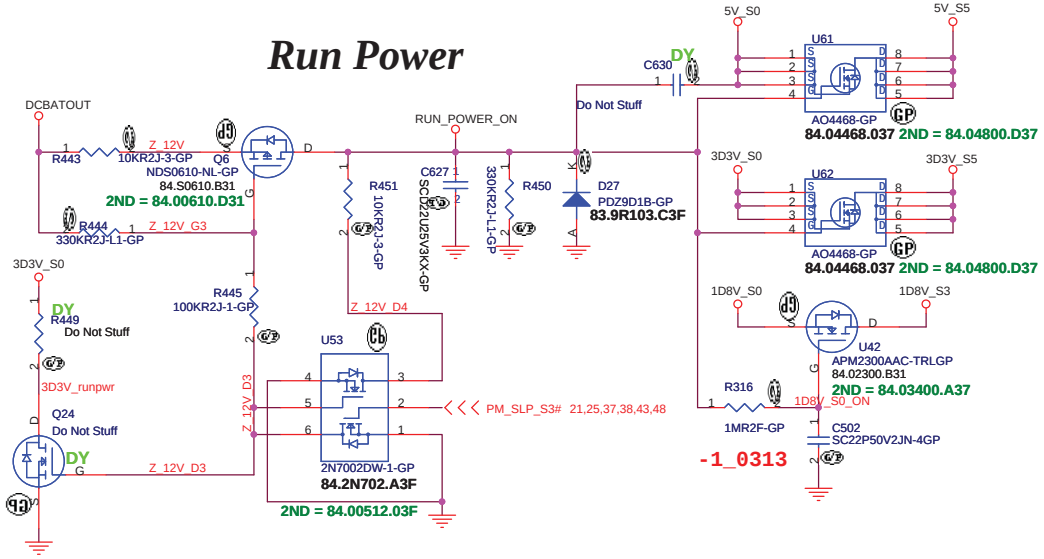

UMA NODOCK

緯創資通	**Wistron Corporation** 21F, 88, Sec.1, Hsin Tai Wu Rd., Hsichih, Taipei Hsien 221, Taiwan, R.O.C.
Title	***RUN POWER and 3D3V_AUX_S5***
Size A3	Document Number **Olan** Rev -2M
Date: Monday, May 05, 2008	Sheet 47 of 58

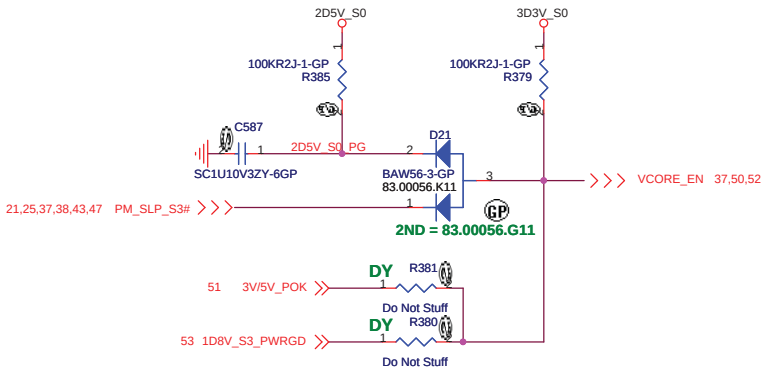

P/H @ 1D8V_S3 PAGE

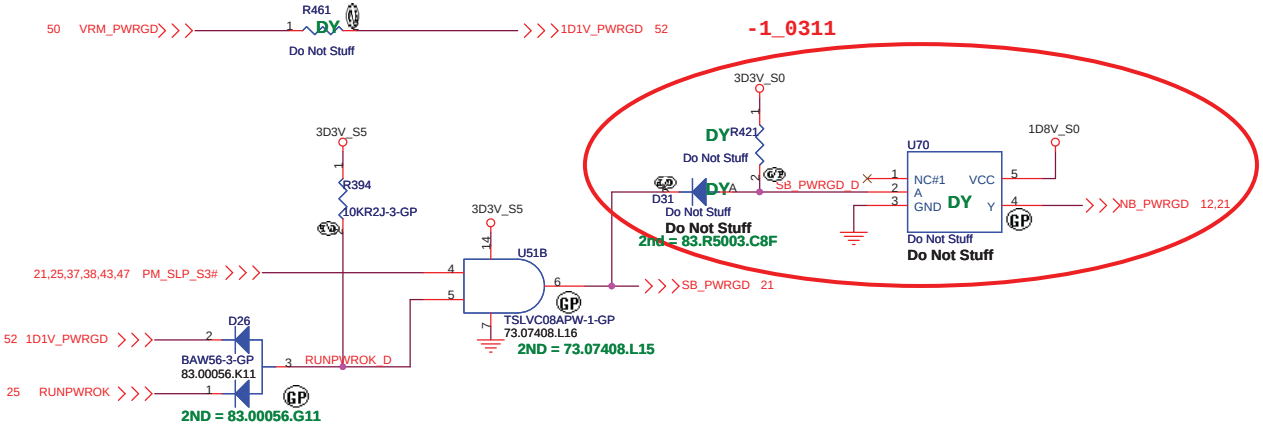

UMA NODOCK

緯創資通 **Wistron Corporation**
21F, 88, Sec.1, Hsin Tai Wu Rd., Hsichih,
Taipei Hsien 221, Taiwan, R.O.C.

Title: ***POWER ON LOGIC***

Size	Document Number	Rev
A3	Olan	-2M

Date: Monday, May 05, 2008 Sheet 48 of 58

Adapter

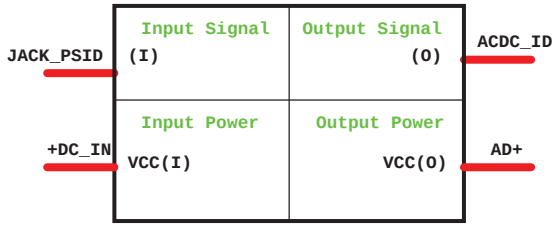

SN0608098

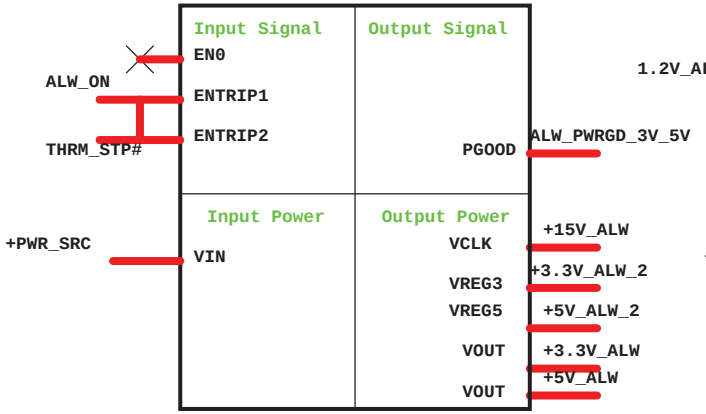

DCDC 1D2V(TPS5117)

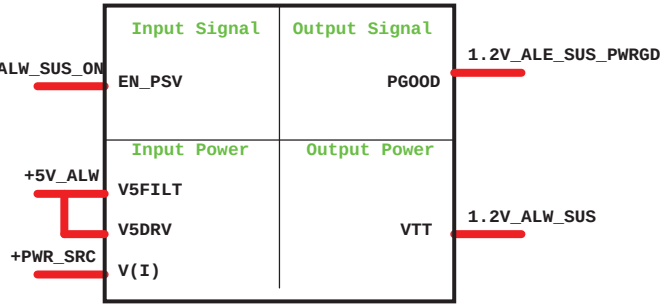

CPU_CORE
ISL6265HRTZ

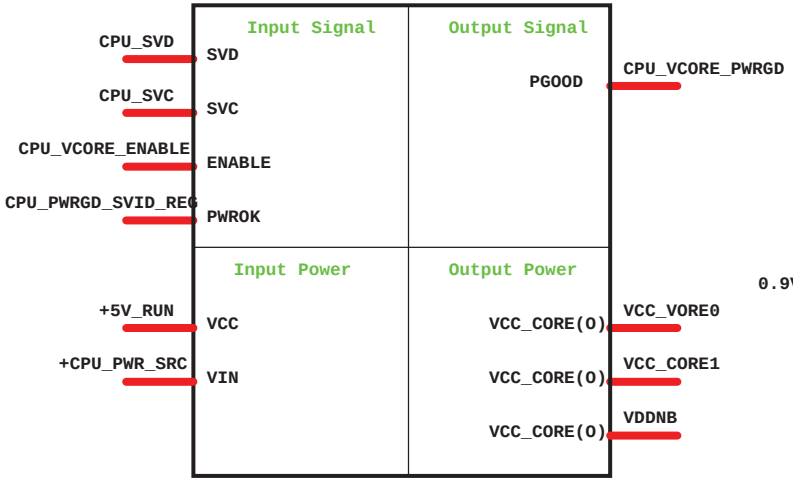

	S3	S5	VDDQ	VTTREF	VTT
S0 S3	1	1	1	1	1
S4 S5	0	0	0	0	0

1D8V/0D9V(TPS5116)

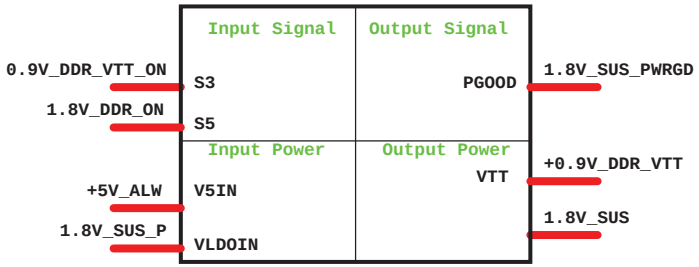

1D1V(TPS5117)

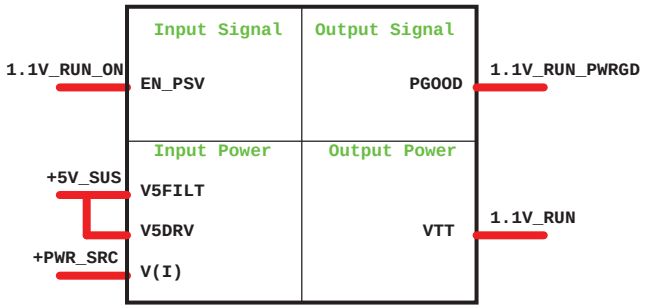

1.5V_LDO

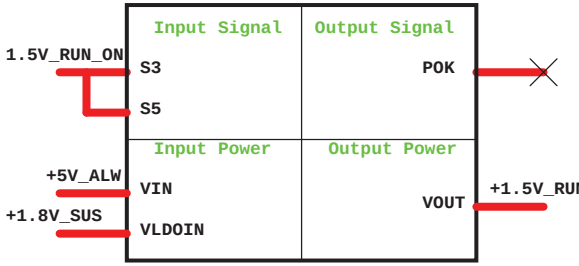

CHARGER BQ24745

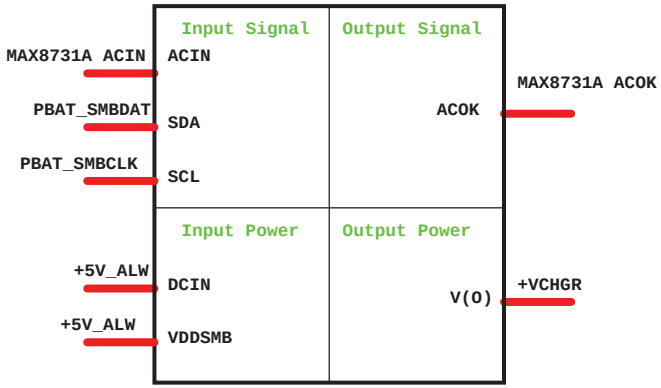

2.5V LDO
EMC4002

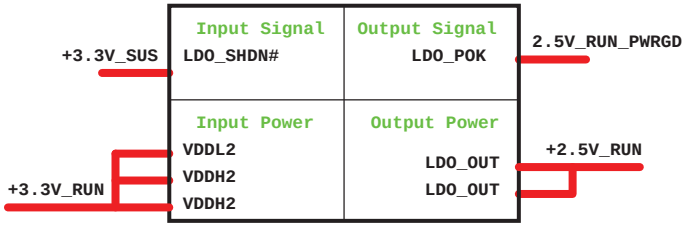

UMA NODOCK

緯創資通 **Wistron Corporation**
21F, 88, Sec.1, Hsin Tai Wu Rd., Hsichih,
Taipei Hsien 221, Taiwan, R.O.C.

Title: ***Power Block Diagram***

Size	Document Number	Rev
A3	Olan	-1

Date: Friday, April 18, 2008 Sheet 49 of 58

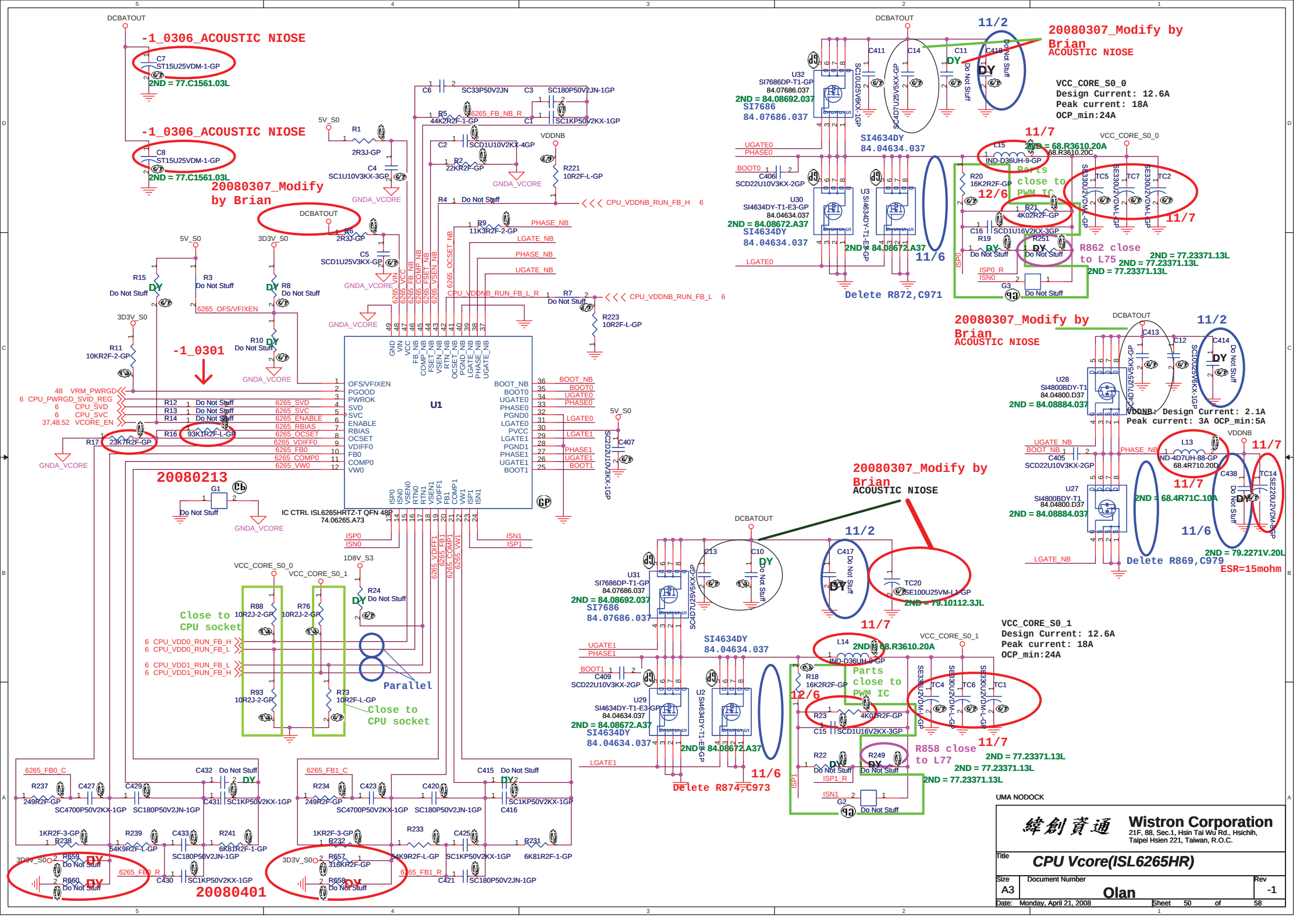
-1_0306_ACOUSTIC NIOSE
C7 ST15U25VDM-1-GP
2ND = 77.C1561.03L
C8 ST15U25VDM-1-GP
2ND = 77.C1561.03L
20080307_Modify by Brian
DCBATOUT
5V_S0
3D3V_S0
VDDNB
VCC_CORE_S0_0
VCC_CORE_S0_1
1D8V_S3
-1_0301
20080213
U1
IC CTRL ISL6265HRTZ-T QFN 48P
74.06265.A73
OFS/VFIXEN
PGOOD
PWROK
SVD
SVC
ENABLE
RBIAS
OCSET
VDIFF0
FB0
COMP0
VW0
BOOT_NB
BOOT0
UGATE0
PHASE0
PGND0
LGATE0
PVCC
LGATE1
PGND1
PHASE1
UGATE1
BOOT1
ISP0
ISN0
VSEN0
RTN0
RTN1
VSEN1
VDIFF1
FB1
COMP1
VW1
ISP1
ISN1
GND
VIN
VCC
FB_NB
COMP_NB
FSET_NB
VSEN_NB
RTN_NB
OCSET_NB
PGND_NB
LGATE_NB
PHASE_NB
UGATE_NB
48 VRM_PWRGD
6 CPU_PWRGD_SVID_REG
6 CPU_SVD
6 CPU_SVC
37,48,52 VCORE_EN
6 CPU_VDD0_RUN_FB_H
6 CPU_VDD0_RUN_FB_L
6 CPU_VDD1_RUN_FB_L
6 CPU_VDD1_RUN_FB_H
CPU_VDDNB_RUN_FB_H 6
CPU_VDDNB_RUN_FB_L 6
Close to CPU socket
Parallel
Close to CPU socket
20080401
11/2
20080307_Modify by Brian
ACOUSTIC NIOSE
VCC_CORE_S0_0
Design Current: 12.6A
Peak current: 18A
OCP_min:24A
SI7686DP-T1-GP
84.07686.037
2ND = 84.08692.037
SI7686
84.07686.037
SI4634DY
84.04634.037
2ND = 84.08672.A37
SI4634DY
84.04634.037
Delete R872,C971
11/7
2ND = 68.R3610.20A
IND-D36UH-9-GP
Parts close to PWM IC
12/6
R862 close to L75
2ND = 77.23371.13L
11/6
20080307_Modify by Brian
ACOUSTIC NIOSE
SI4800BDY-T1
84.04800.D37
2ND = 84.08884.037
VDDNB: Design Current: 2.1A
Peak current: 3A OCP_min:5A
IND-4D7UH-88-GP
68.4R710.20D
2ND = 68.4R71C.10A
2ND = 79.2271V.20L
ESR=15mohm
Delete R869,C979
20080307_Modify by Brian
ACOUSTIC NIOSE
VCC_CORE_S0_1
Design Current: 12.6A
Peak current: 18A
OCP_min:24A
Delete R874,C973
R858 close to L77
2ND = 77.23371.13L
UMA NODOCK
Wistron Corporation
21F, 88, Sec.1, Hsin Tai Wu Rd., Hsichih, Taipei Hsien 221, Taiwan, R.O.C.
Title
CPU Vcore(ISL6265HR)
Size A3
Document Number
Olan
Rev -1
Date: Monday, April 21, 2008
Sheet 50 of 58

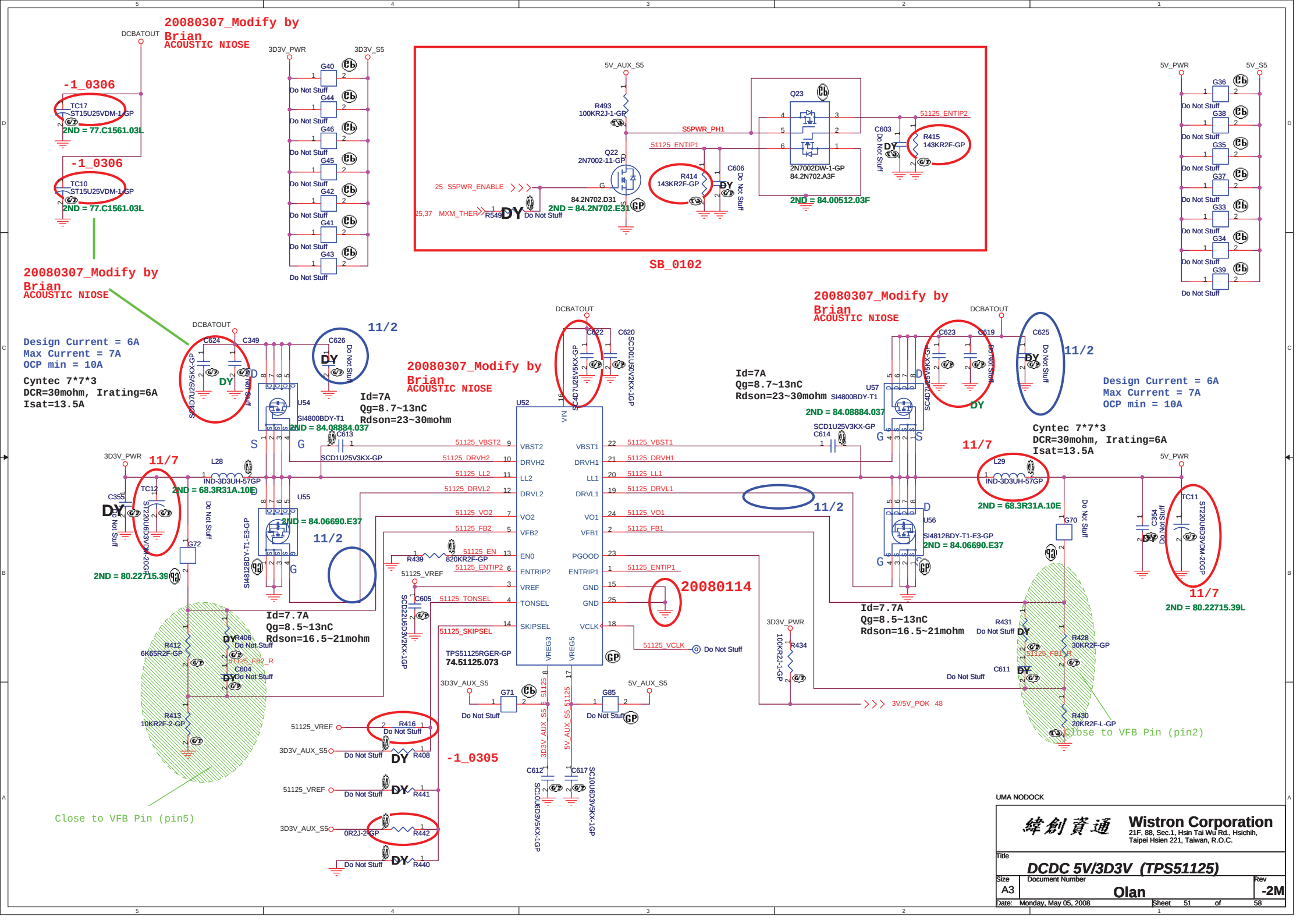
20080307_Modify by Brian
ACOUSTIC NIOSE
DCBATOUT
-1_0306
TC17
ST15U25VDM-1-GP
2ND = 77.C1561.03L
-1_0306
TC10
ST15U25VDM-1-GP
2ND = 77.C1561.03L
3D3V_PWR
3D3V_S5
G40
G44
G46
G45
G42
G41
G43
Do Not Stuff
5V_AUX_S5
R493
100KR2J-1-GP
S5PWR_PH1
Q23
2N7002DW-1-GP
84.2N702.A3F
2ND = 84.00512.03F
51125_ENTIP2
C603
R415
143KR2F-GP
51125_ENTIP1
Q22
2N7002-11-GP
84.2N702.D31
2ND = 84.2N702.E31
R414
143KR2F-GP
C606
25 S5PWR_ENABLE
25,37 MXM_THER
R549
DY
SB_0102
5V_PWR
5V_S5
G36
G38
G35
G37
G33
G34
G39
Design Current = 6A
Max Current = 7A
OCP min = 10A
Cyntec 7*7*3
DCR=30mohm, Irating=6A
Isat=13.5A
C624
C349
C626
11/2
U54
SI4800BDY-T1
2ND = 84.08884.037
Id=7A
Qg=8.7~13nC
Rdson=23~30mohm
C613
SCD1U25V3KX-GP
U52
VIN
VBST2
DRVH2
LL2
DRVL2
VO2
VFB2
EN0
ENTRIP2
VREF
TONSEL
SKIPSEL
VBST1
DRVH1
LL1
DRVL1
VO1
VFB1
PGOOD
ENTRIP1
GND
GND
VCLK
VREG3
VREG5
51125_VBST2
51125_DRVH2
51125_LL2
51125_DRVL2
51125_VO2
51125_FB2
51125_EN
51125_ENTIP2
51125_TONSEL
51125_SKIPSEL
51125_VBST1
51125_DRVH1
51125_LL1
51125_DRVL1
51125_VO1
51125_FB1
51125_ENTIP1
51125_VCLK
Do Not Stuff
R439
820KR2F-GP
51125_VREF
C605
SCD22U6D3V2KX-1GP
TPS51125RGER-GP
74.51125.073
20080114
3D3V_AUX_S5
G71
G85
5V_AUX_S5
51125
3D3V_AUX_S5
5V_AUX_S5
C612
C617
SC10U6D3V5KX-1GP
11/7
L28
IND-3D3UH-57GP
2ND = 68.3R31A.10E
TC12
ST220U6D3VDM-20GP
2ND = 80.22715.39
C355
G72
U55
SI4812BDY-T1-E3-GP
2ND = 84.06690.E37
11/2
R412
6K65R2F-GP
R406
C604
R413
10KR2F-2-GP
Close to VFB Pin (pin5)
51125_VREF
R416
3D3V_AUX_S5
R408
51125_VREF
R441
3D3V_AUX_S5
0R2J-2-GP
R442
R440
-1_0305
20080307_Modify by Brian
ACOUSTIC NIOSE
DCBATOUT
C622
C620
SCD01U50V2KX-1GP
SC4D7U25V5KX-GP
C623
C619
C625
11/2
U57
SI4800BDY-T1
2ND = 84.08884.037
SCD1U25V3KX-GP
C614
Id=7A
Qg=8.7~13nC
Rdson=23~30mohm
Design Current = 6A
Max Current = 7A
OCP min = 10A
Cyntec 7*7*3
DCR=30mohm, Irating=6A
Isat=13.5A
11/7
L29
IND-3D3UH-57GP
2ND = 68.3R31A.10E
5V_PWR
U56
SI4812BDY-T1-E3-GP
2ND = 84.06690.E37
11/2
G70
C354
TC11
ST220U6D3VDM-20GP
11/7
2ND = 80.22715.39L
Id=7.7A
Qg=8.5~13nC
Rdson=16.5~21mohm
3D3V_PWR
R434
100KR2J-1-GP
3V/5V_POK 48
R431
R428
30KR2F-GP
C611
R430
20KR2F-1-GP
Close to VFB Pin (pin2)
UMA NODOCK
緯創資通
Wistron Corporation
21F, 88, Sec.1, Hsin Tai Wu Rd., Hsichih,
Taipei Hsien 221, Taiwan, R.O.C.
Title
DCDC 5V/3D3V (TPS51125)
Size
A3
Document Number
Olan
Rev
-2M
Date: Monday, May 05, 2008
Sheet 51 of 58

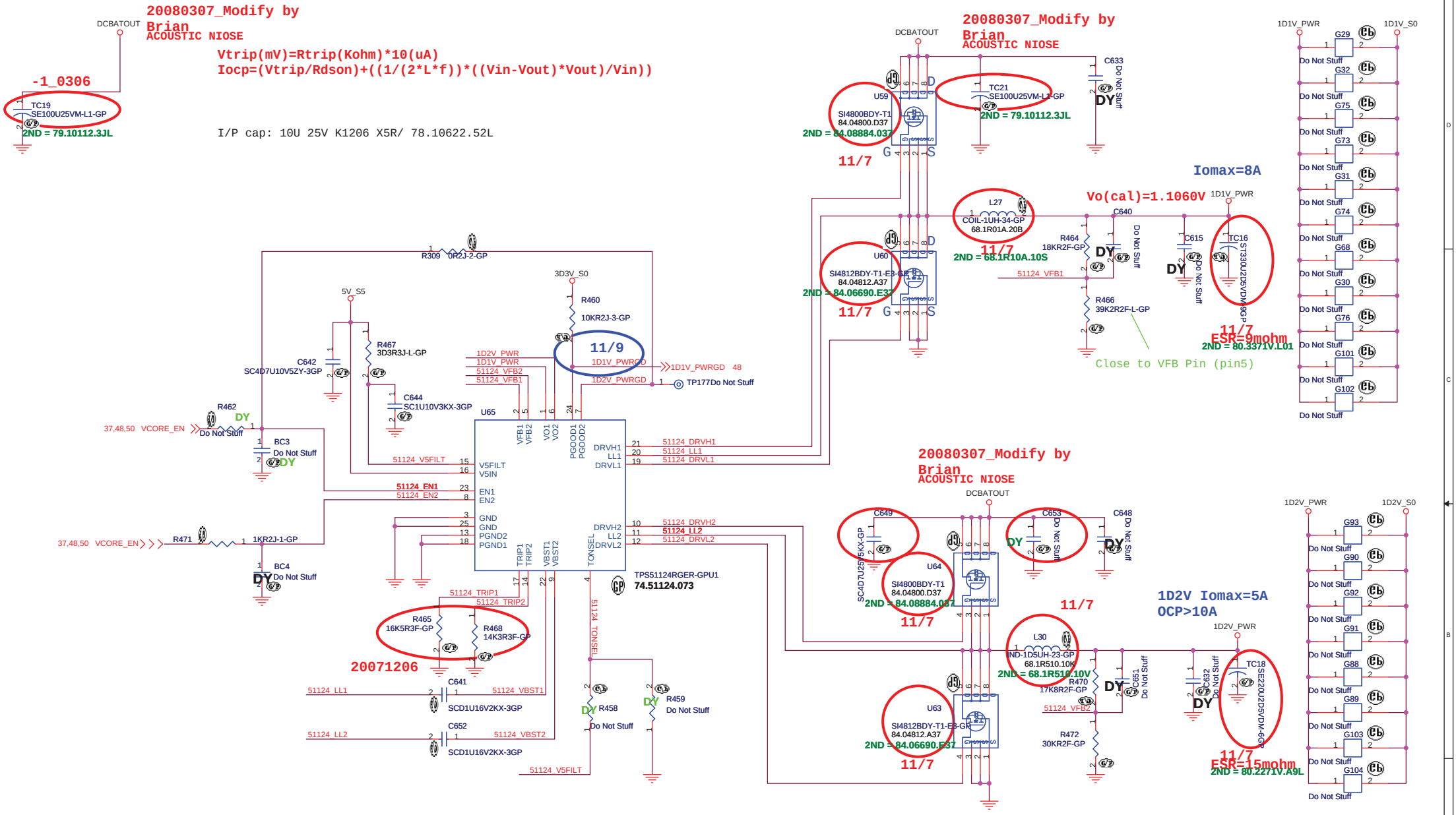

	GND	OPEN	V5FILT
TONSEL	240k/CH1 300k/CH2	300k/CH1 360k/CH2	360k/CH1 420k/CH2

Vout=0.758V*(R1+R2)/R2 --> PWM mode
Vout=0.764V*(R1+R2)/R2 --> Skip Mode

UMA NODOCK

緯創資通 Wistron Corporation
21F, 88, Sec.1, Hsin Tai Wu Rd., Hsichih, Taipei Hsien 221, Taiwan, R.O.C.

Title: TPS51124_1D1V_1D2V

Size: A3 | Document Number: Olan | Rev: -1

Date: Monday, April 21, 2008 | Sheet 52 of 58

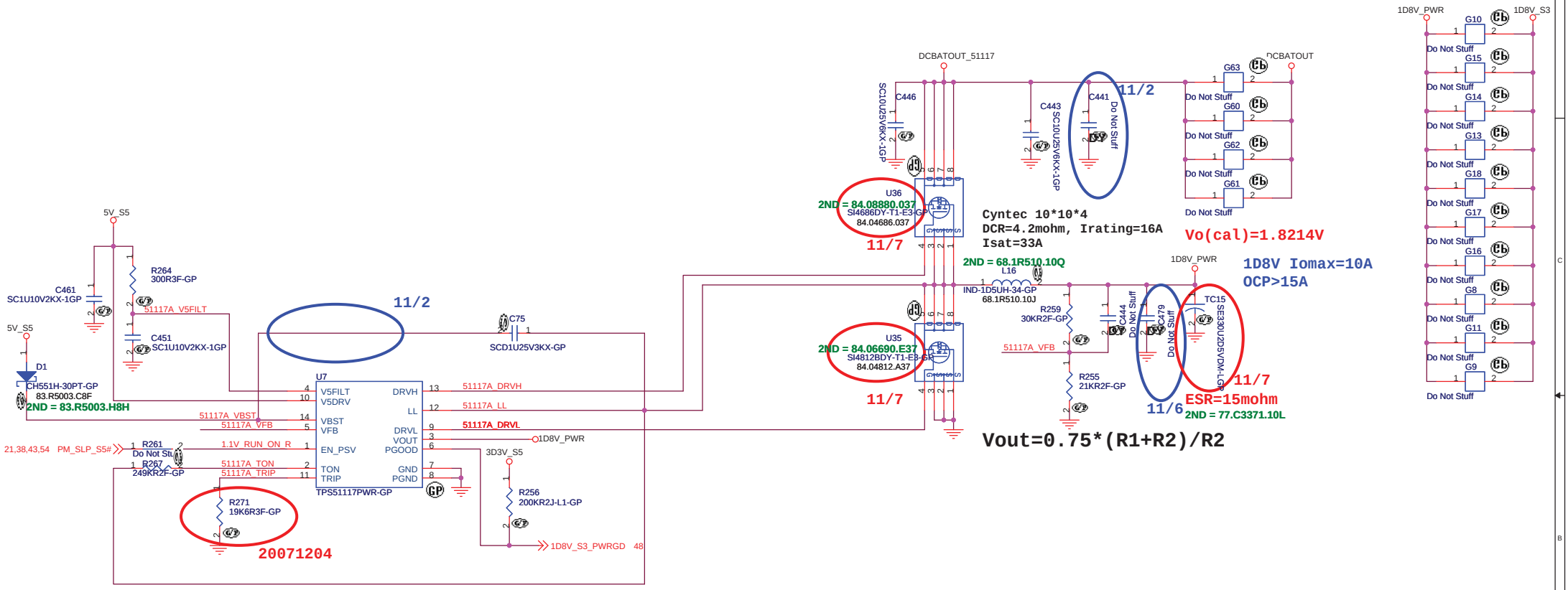

UMA NODOCK

緯創資通 **Wistron Corporation**
21F, 88, Sec.1, Hsin Tai Wu Rd., Hsichih,
Taipei Hsien 221, Taiwan, R.O.C.

Title: ***1D8V(TPS5117)***

Size	Document Number	Rev
A3	Olan	-1

Date: Friday, April 18, 2008 Sheet 53 of 58

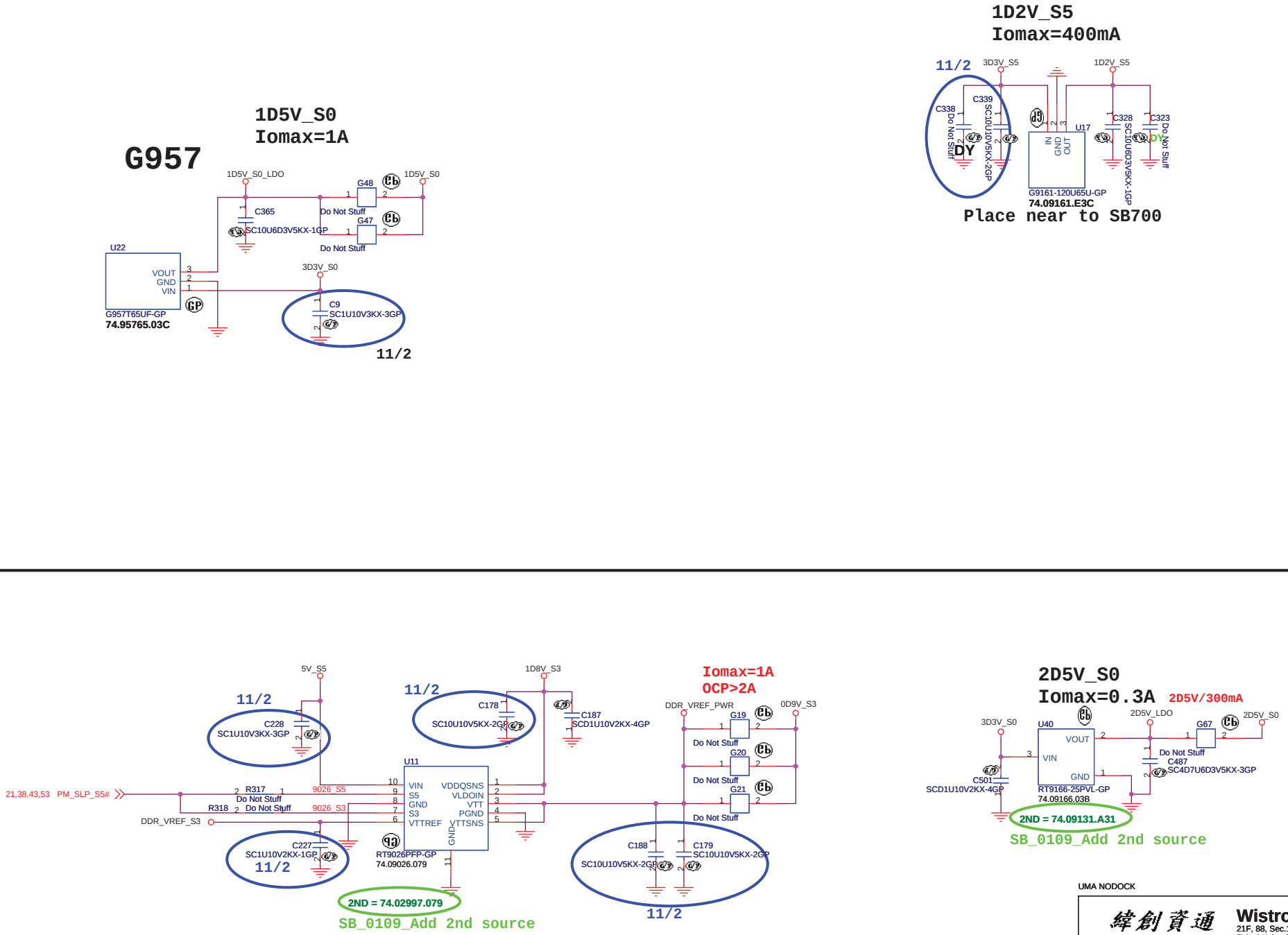

UMA NODOCK

緯創資通 **Wistron Corporation**
21F, 88, Sec.1, Hsin Tai Wu Rd., Hsichih,
Taipei Hsien 221, Taiwan, R.O.C.

Title: ***0D9V&2D5V&1D25V&1D5V***

Size	Document Number	Rev
A3	Olan	-1

Date: Friday, April 18, 2008 Sheet 54 of 58

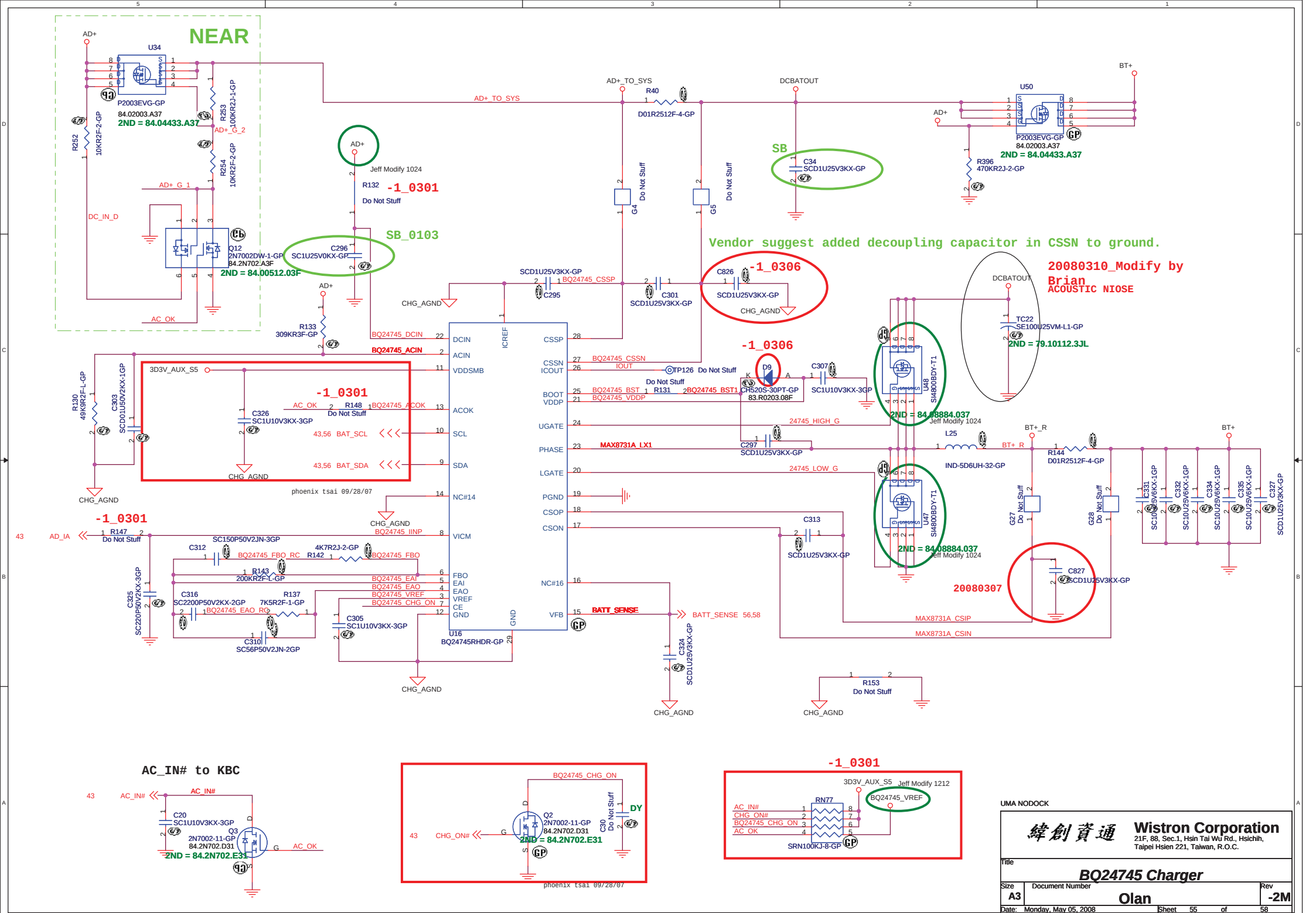

UMA NODOCK

Wistron Corporation
21F, 88, Sec.1, Hsin Tai Wu Rd., Hsichih,
Taipei Hsien 221, Taiwan, R.O.C.

Title: **BQ24745 Charger**

Size	Document Number	Rev
A3	Olan	-2M

Date: Monday, May 05, 2008 Sheet 55 of 58

Adaptor in to generate DCBATOUT

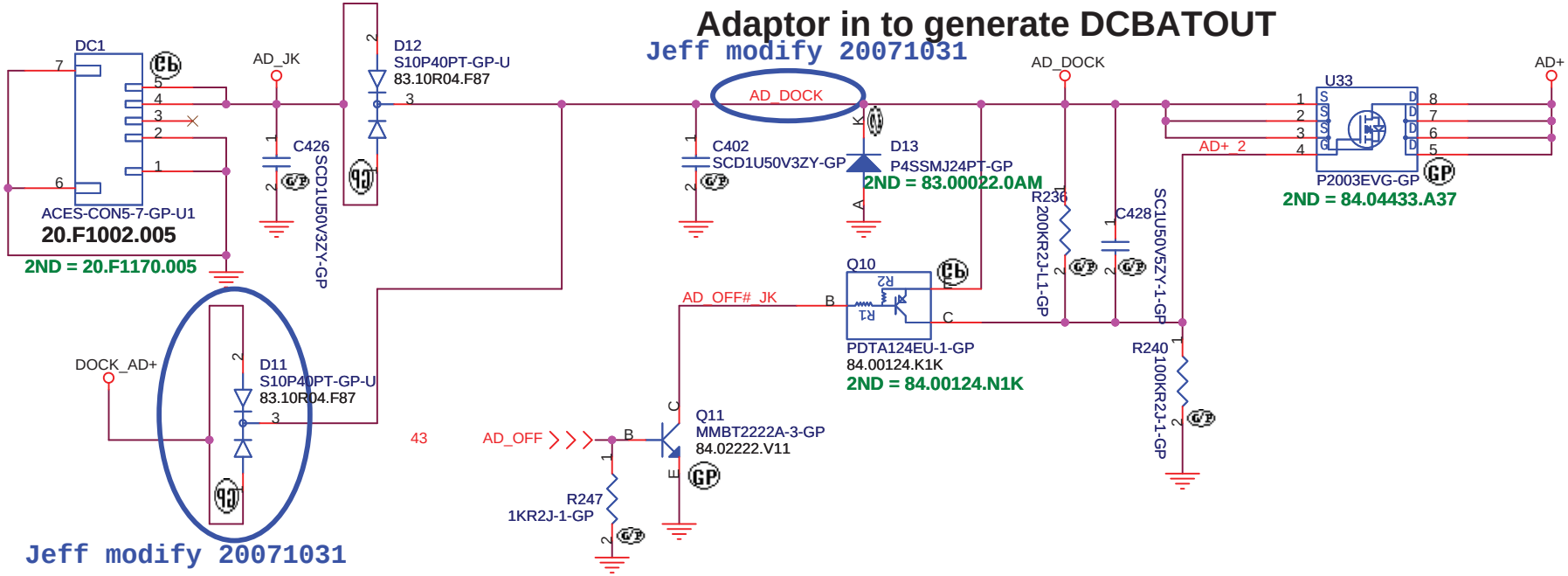

BATTERY CONNECTOR

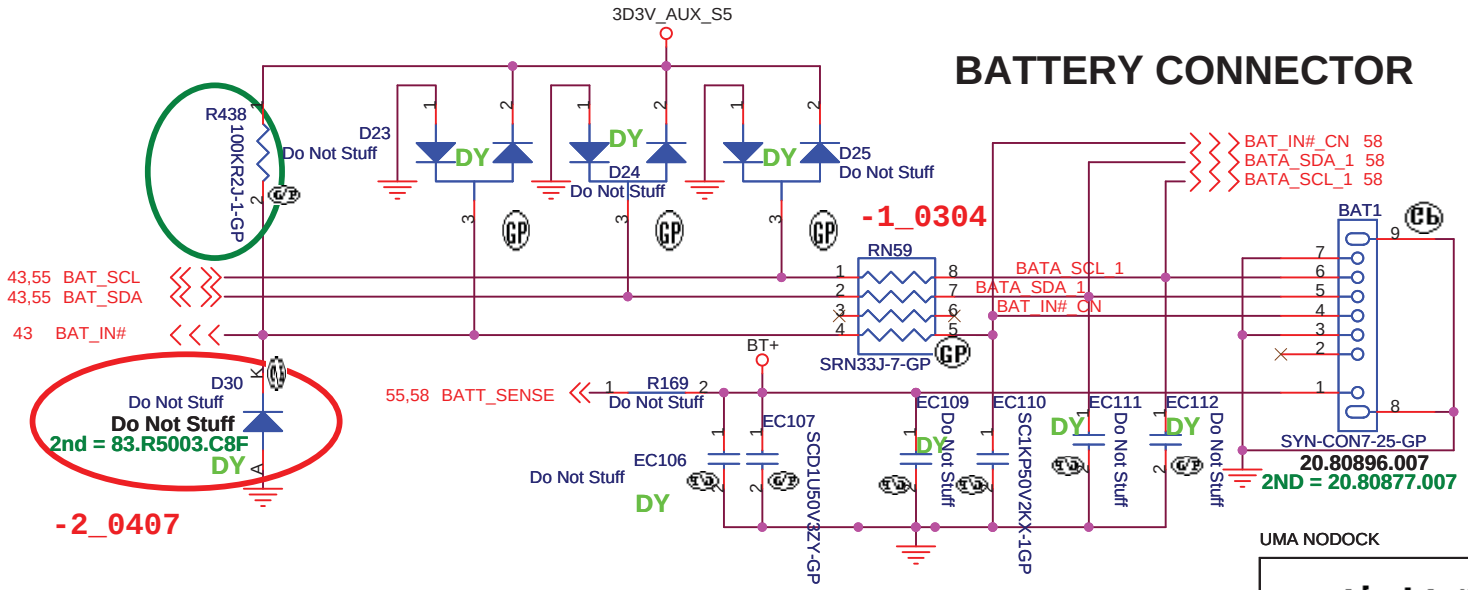

UMA NODOCK

緯創資通	**Wistron Corporation** 21F, 88, Sec.1, Hsin Tai Wu Rd., Hsichih, Taipei Hsien 221, Taiwan, R.O.C.	
Title	***AD/BATT CONN***	
Size **A4**	Document Number **Olan**	Rev **-1**
Date: Tuesday, April 29, 2008	Sheet 56 of 58	

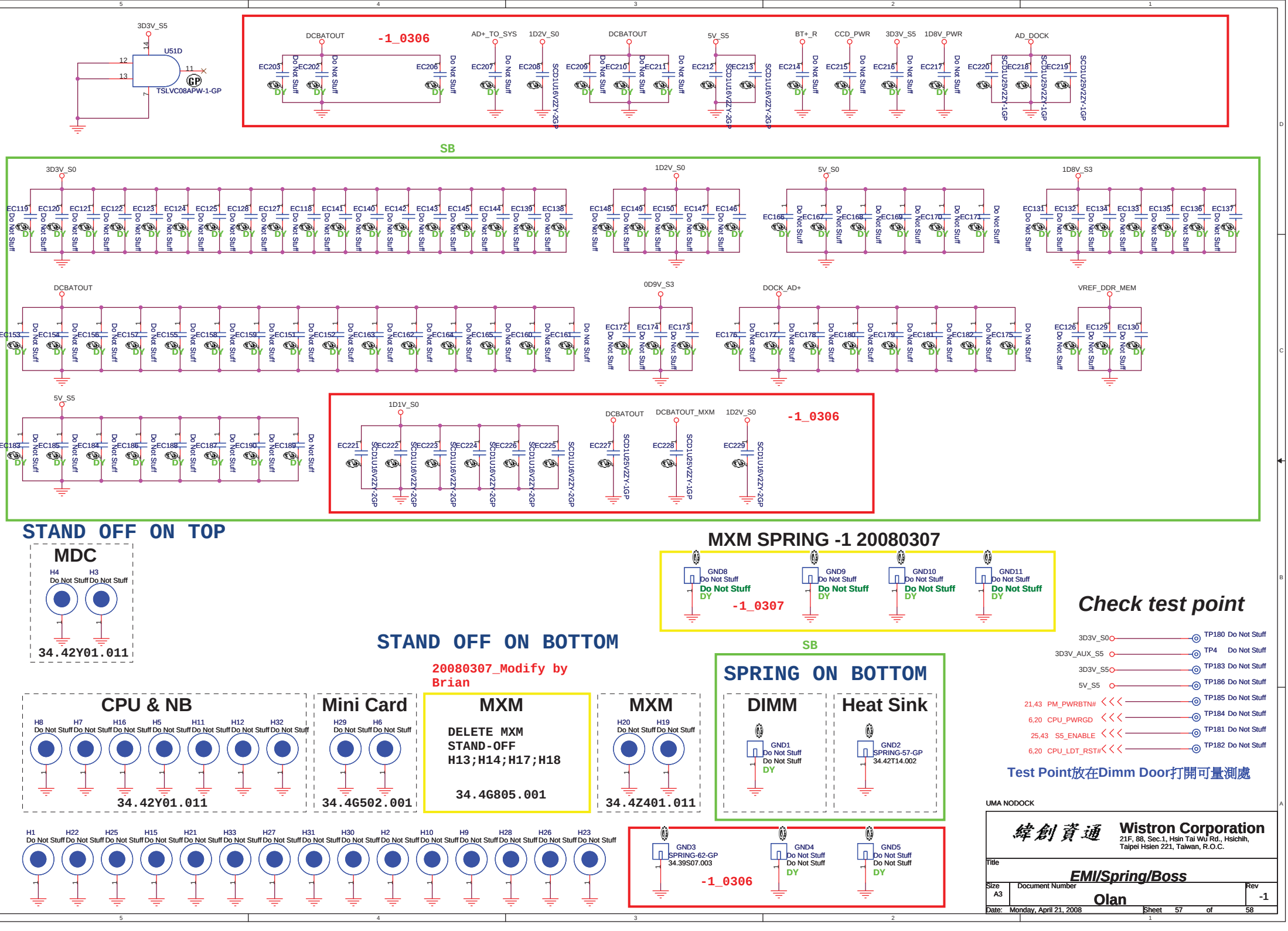
3D3V_S5
U51D
TSLVC08APW-1-GP
-1_0306
DCBATOUT
AD+_TO_SYS
1D2V_S0
5V_S5
BT+_R
CCD_PWR
3D3V_S5
1D8V_PWR
AD_DOCK
SB
3D3V_S0
1D2V_S0
5V_S0
1D8V_S3
DCBATOUT
0D9V_S3
DOCK_AD+
VREF_DDR_MEM
5V_S5
1D1V_S0
DCBATOUT
DCBATOUT_MXM
1D2V_S0
-1_0306
Do Not Stuff
DY
STAND OFF ON TOP
MDC
H4
H3
Do Not Stuff
34.42Y01.011
MXM SPRING -1 20080307
GND8
GND9
GND10
GND11
Do Not Stuff
-1_0307
Check test point
3D3V_S0
3D3V_AUX_S5
3D3V_S5
5V_S5
21,43 PM_PWRBTN#
6,20 CPU_PWRGD
25,43 S5_ENABLE
6,20 CPU_LDT_RST#
TP180
TP4
TP183
TP186
TP185
TP184
TP181
TP182
Test Point放在Dimm Door打開可量測處
STAND OFF ON BOTTOM
20080307_Modify by Brian
SB
SPRING ON BOTTOM
CPU & NB
H8
H7
H16
H5
H11
H12
H32
34.42Y01.011
Mini Card
H29
H6
34.4G502.001
MXM
DELETE MXM
STAND-OFF
H13;H14;H17;H18
34.4G805.001
MXM
H20
H19
34.4Z401.011
DIMM
GND1
Heat Sink
GND2
SPRING-57-GP
34.42T14.002
H1
H22
H25
H15
H21
H33
H27
H31
H30
H2
H10
H9
H28
H26
H23
GND3
SPRING-62-GP
34.39S07.003
GND4
GND5
-1_0306
UMA NODOCK
緯創資通
Wistron Corporation
21F, 88, Sec.1, Hsin Tai Wu Rd., Hsichih,
Taipei Hsien 221, Taiwan, R.O.C.
Title
EMI/Spring/Boss
Size
A3
Document Number
Olan
Rev
-1
Date: Monday, April 21, 2008
Sheet 57 of 58

INTMIC1

40,42	INT_MIC1_CN	1	TP191 Do Not Stuff
40,42	268_GPIO1	1	TP278 Do Not Stuff

SPKR1

41,42	SPKR_L-	1	TP192 Do Not Stuff
41,42	SPKR_L+	1	TP193 Do Not Stuff
41,42	SPKR_R-	1	TP194 Do Not Stuff
41,42	SPKR_R+	1	TP195 Do Not Stuff

DC1

	AD_JK	1	TP196 Do Not Stuff
	AD_JK	1	TP197 Do Not Stuff
	AD_JK	1	TP250 Do Not Stuff

PWRCN1

	3D3V_S0	1	TP199 Do Not Stuff
	3D3V_S5	1	TP198 Do Not Stuff
17	NUM_LED#	1	TP203 Do Not Stuff
17	CAP_LED#	1	TP202 Do Not Stuff
17,22	MEDIA_LED#	1	TP200 Do Not Stuff
17	KBC_PWRBTN#_CN	1	TP201 Do Not Stuff
17	FRONT_PWRLED#_R1	1	TP207 Do Not Stuff
17	STDBY_LED#_R1	1	TP206 Do Not Stuff

KB1

43	KROW8	1	TP204 Do Not Stuff
43	KROW6	1	TP205 Do Not Stuff
43	KROW7	1	TP219 Do Not Stuff
43	KROW5	1	TP218 Do Not Stuff
43	KROW4	1	TP212 Do Not Stuff
43	KROW3	1	TP213 Do Not Stuff
43	KROW2	1	TP217 Do Not Stuff
43	KROW1	1	TP216 Do Not Stuff
43	KCOL18	1	TP214 Do Not Stuff
43	KCOL17	1	TP215 Do Not Stuff
43	KCOL16	1	TP210 Do Not Stuff
43	KCOL15	1	TP211 Do Not Stuff
43	KCOL14	1	TP208 Do Not Stuff
43	KCOL13	1	TP209 Do Not Stuff
43	KCOL12	1	TP232 Do Not Stuff
43	KCOL11	1	TP233 Do Not Stuff
43	KCOL10	1	TP230 Do Not Stuff
43	KCOL9	1	TP231 Do Not Stuff
43	KCOL8	1	TP225 Do Not Stuff
43	KCOL7	1	TP224 Do Not Stuff
43	KCOL6	1	TP228 Do Not Stuff
43	KCOL5	1	TP229 Do Not Stuff
43	KCOL4	1	TP226 Do Not Stuff
43	KCOL3	1	TP227 Do Not Stuff
43	KCOL2	1	TP222 Do Not Stuff
43	KCOL1	1	TP223 Do Not Stuff

SWITCHCN1

	3D3V_AUX_S5	1	TP221 Do Not Stuff
15,43	LID_CLOSE#	1	TP220 Do Not Stuff
15,43	EPRESENTATION#	1	TP246 Do Not Stuff
15,43	ELOCK#	1	TP247 Do Not Stuff
15,43	SYNC#	1	TP244 Do Not Stuff
15,43	INTERNET#	1	TP245 Do Not Stuff
15,43	E-BUTTON#	1	TP239 Do Not Stuff
15,43	PROGRAM#	1	TP238 Do Not Stuff
15,43	MAIL#	1	TP243 Do Not Stuff

FP1

	3D3V_S0	1	TP242 Do Not Stuff
21,31	USBPP6	1	TP240 Do Not Stuff
21,31	USBPN6	1	TP241 Do Not Stuff
31,43	FP_DETECT#	1	TP235 Do Not Stuff
21,31	FP_ID	1	TP237 Do Not Stuff
31,43	TP_LEFT	1	TP236 Do Not Stuff
31,43	TP_RIGHT	1	TP234 Do Not Stuff

TPDA1

	5V_S0	1	TP274 Do Not Stuff
43	TP_DATA	1	TP275 Do Not Stuff
43	TP_CLK	1	TP272 Do Not Stuff
31,43	TP_RIGHT	1	TP273 Do Not Stuff
31,43	TP_LEFT	1	TP267 Do Not Stuff

BLUE1

21,28	USBPP5	1	TP266 Do Not Stuff
21,28	USBPN5	1	TP271 Do Not Stuff
	3D3V_BT_S0	1	TP270 Do Not Stuff

USBCN1

	5V_S5	1	TP268 Do Not Stuff
	5V_S5	1	TP280 Do Not Stuff
	1D8V_S3	1	TP269 Do Not Stuff
30	USBCN_OC#	1	TP263 Do Not Stuff
30,43,45	USB_PWR_EN#	1	TP265 Do Not Stuff
21,30	USBPN4	1	TP277 Do Not Stuff
21,30	USBPP4	1	TP264 Do Not Stuff
21,30	USBPN1	1	TP262 Do Not Stuff
21,30	USBPP1	1	TP260 Do Not Stuff
22,30	SATA_TXN2	1	TP261 Do Not Stuff
22,30	SATA_TXP2	1	TP258 Do Not Stuff
22,30	SATA_RXP2	1	TP259 Do Not Stuff
22,30	SATA_RXN2	1	TP253 Do Not Stuff

FAN1

25	FAN1_FG1	1	TP257 Do Not Stuff
	FAN1_VCC	1	TP256 Do Not Stuff

BAT1

56	BATA_SDA_1	1	TP254 Do Not Stuff
56	BATA_SCL_1	1	TP255 Do Not Stuff
	BT+	1	TP251 Do Not Stuff
	BT+	1	TP276 Do Not Stuff
	BT+	1	TP279 Do Not Stuff
55,56	BATT_SENSE	1	TP249 Do Not Stuff
56	BAT_IN#_CN	1	TP248 Do Not Stuff

UMA NODOCK

緯創資通 **Wistron Corporation**
21F, 88, Sec.1, Hsin Tai Wu Rd., Hsichih,
Taipei Hsien 221, Taiwan, R.O.C.

Title: AFTE TP

Size	Document Number	Rev
A3	Olan	-2M

Date: Monday, May 05, 2008 Sheet 58 of 58